Technical Catalogue
SCALA laboratory furniture system

SCALA

WALDNER

Technical Catalogue
SCALA

The new design of our ***SCALA*** range of laboratory furniture will set the trend for future laboratory design.

But only if design and functionality work together effectively, real values will result that can contribute to enrich the laboratory environment.

We have redesigned our range of laboratory furniture based on innovative ideas, sophisticated detailed solutions and high-quality materials, thus meeting the requirements of our users with respect to ergonomics and profitability more than ever.

Our ***SCALA*** laboratory furniture system with its flexible application units can easily be adapted to new room situations. In this way we can provide a large number of different design and furniture variants for every functional area of the laboratory.

With our latest ***SCALA*** laboratory furniture we offer innovative, mature technology, maximum operational safety, ergonomic design and perfect service. Discover all details of our new furniture on the following pages.

Not without good reason have customers from all over the world relied on us and our service for more than 60 years.

With this technical catalogue, we are providing you with the basis for your future laboratory.

Contact us. Our specialists will always be pleased to talk to you.

WALDNER

Technical Catalogue
Table of contents

1 Fume cupboards and extraction devices

Bench-mounted fume cupboards with rear wall installation **12**
Bench-mounted fume cupboard 12
Low ceiling bench-mounted fume cupboard 15
Secuflow bench-mounted fume cupboard 18
Secuflow low ceiling bench-mounted fume cupboard 21

Bench-mounted fume cupboards with side installation **24**
Bench-mounted fume cupboard with side installation 24
Low ceiling bench-mounted fume cupboard with side installation 27
Secuflow bench-mounted fume cupboard with side installation 30
Secuflow low ceiling bench-mounted fume cupboard with side installation 33
Bench-mounted fume cupboard with side installation for work performed while seated 36
Secuflow bench-mounted fume cupboard with side installation for work performed while seated 39

Walk-in fume cupboards **42**
Walk-in fume cupboard with side installation 42

Low level fume cupboards **45**
Low level fume cupboard with side installation 45

Special fume cupboards **48**
Special application fume cupboard 48
Radio-isotope fume cupboard 51
Filter fume cupboard 54

Mobile fume cupboards **57**
AeroEm 57
MobilAir 60

Housings **63**
Permanent enclosure 63

Local extraction devices **65**
Underbench exhaust 65
AAS extract system 66
Extraction arm 67
Snorkel hood 68
Extractor hood 69

2 Service modules

Service duct element 78
Service spine 80
Service wing 84
Suspended service boom 87
Service column 89
Service distribution terminal 92
Service wall duct 93
Bench-mounted service duct 94
Service ceiling 97

3 Laboratory benches and sinks

Laboratory benches 106
Combinations of materials/bench frames 106
Worktop material 108
Bench with H-frame 113
Bench with C-frame 114
Bench with cantilever frame 115
Bench with self-supporting underbench units 116

Mobile tables 117

Laboratory sinks 118
Laboratory sink 118
Laboratory sink module 119
Drip cup on service spine 121
Drip cup in worktop 122
Mobile sink 123
AquaEL 124

Special tables 125
Add-on table for low level fume cupboards 125
Balance table 126
Rack 127
Swing 128
Height-adjustable table 129
Round table 130
Sliding element Sekretär 131
Sliding element Assistent 132
Sliding element Protector 133

4 Storage cupboards

Underbench units 138
Underbench unit on plinth 138
Underbench unit on castors 140
Suspended underbench unit 142
Self-supporting underbench unit for fume cupboards 144
Push-in underbench unit for fume cupboards 147
Underbench unit for sinks 148

Overbench cabinets 151

Laboratory cabinets 153
Laboratory cabinet 153
Emergency cabinet 157

Top-mounted cabinets 158

Pull-out cabinets 159

Special cabinets 161
Laboratory cabinet for storing acids and alkalis 161
Underbench safety unit for fume cupboards for storing acids and alkalis 163
FWF 90 underbench safety unit for fume cupboards for storing flammable liquids 165
FWF 90 safety cabinet for storing flammable liquids 167
G 90 gas cylinder cabinet 169

5 Supply and disposal

Supply system for flammable liquids 174
Waste disposal system for acids and alkalis 177
Waste disposal system for flammable liquids 180
Waste disposal system for solid matter and domestic waste 183
Waste disposal system for radio-isotope residual material 185

6 School

School system 186

7 Services

Control and Monitoring 188

8 Accessories

Accessories for laboratory funiture system 200

9 General

Colours 204
Laboratory planning 206
Awards 208
Intallation interfaces mechanical and electrical services 210

WALDNER

1 Fume cupboards and extraction devices

Energy efficiency, maximum ergonomics and a larger internal workspace make working with our new fume cupboards even safer and more convenient.

A new design together with an enlarged product range characterise the fume cupboards of our new ***SCALA*** laboratory range.

Combined with grid lengths up to 2400 mm of our fume cupboards, we offer the most comprehensive product range available in the market. Almost all fume cupboards are also available with Secuflow technology.

Bench-mounted fume cupboards with rear wall installation **12**
Bench-mounted fume cupboard 12
Low ceiling bench-mounted fume cupboard 15
Secuflow bench-mounted fume cupboard 18
Secuflow low ceiling bench-mounted fume cupboard 21

Bench-mounted fume cupboards with side installation **24**
Bench-mounted fume cupboard with side installation 24
Low ceiling bench-mounted fume cupboard with side installation 27
Secuflow bench-mounted fume cupboard with side installation 30
Secuflow low ceiling bench-mounted fume cupboard with side installation 33
Bench-mounted fume cupboard with side installation for work performed while seated 36
Secuflow bench-mounted fume cupboard with side installation for work performed while seated 39

Walk-in fume cupboards **42**
Walk-in fume cupboard with side installation 42

Low level fume cupboards **45**
Low level fume cupboard with side installation 45

Special fume cupboards **48**
Special application fume cupboard 48
Radio-isotope fume cupboard 51
Filter fume cupboard 54

Mobile fume cupboards **57**
AeroEm 57
MobilAir 60

Housings **63**
Permanent enclosure 63

Local extraction devices **65**
Underbench exhaust 65
AAS extract system 66
Extraction arm 67
Snorkel hood 68
Extractor hood 69

Control and monitoring **192**

1 Fume cupboards and extraction devices

All laboratory work during which gases, fumes, particles or liquids are handled in dangerous quantities and concentrations must be performed in fume cupboards.

Our new fume cupboards ensure maximum safety, excellent ergonomics and maximum economy.

Reduced energy consumption – increased profitability

The fluid mechanics have been further optimised which means considerably reduced energy consumption of our new fume cupboards while maintaining the high safety level. Our bench-mounted fume cupboards with side installation which are tested in accordance with EN 14175, e.g., use 350 m^3/h/lfm, all bench-mounted fume cupboards with Secuflow technology require 270 m^3/h/lfm.

As an important part of the overall laboratory ventilation scheme, our fume cupboards can be perfectly integrated into the building ventilation concept.

The fact that our Secuflow fume cupboard technology also reduces the investment and operating costs for the ventilation system is another commercial advantage that is made possible by the integrated supportive flow technology. You will find further information on this topic in our Secuflow brochure.

Improved ergonomics with the inclined operating panel

The operating panel is inclined towards the user for easier handling and operation of all fittings and functions.

Safety through the intake airflow profile on the front edge of the fume cupboard worktop

It prevents turbulence that could carry pollutant emissions.

Air flowing into the fume cupboard is guided via the airfoil-like profile geometry (with low turbulence) over the worktop to the rear panel low level extraction which ensures the safe removal of heavy gases, e.g. solvent fumes, directly above the worktop.

For more safety

Maximum user safety is provided by our toothed belt sash mounting along with significantly reduced maintenance effort. The stainless steel reinforced toothed belts prove maximum resistance during endurance tests with more than 200,000 load cycles. The shape of the sash frame offers maximum protection from splashes and splinters.

Anti-slip device for additional protection

In the unlikely case that both sash mountings fail, the sash is stopped in fractions of a second.

Largest possible access area

The slender, patented side posts of our fume cupboards offer an increased nominal width of the internal workspace and due to their special shape ensure that there is little turbulence in the intake air.

Larger capacity of the internal workspace

The internal workspace is 10 % higher thus increasing the entire internal workspace. Useful when working with tall and wide items of experimental equipment.

1 Fume cupboards and extraction devices

Clear view of all processes in the workspace

The high level glazed panel enables tall experimental equipment and processes to be clearly seen.

The new scaffold points

Scaffold rods with diameters of 12 and 13 mm can be firmly secured.

All functions at a glance

The Soft Touch control element integrated in the fume cupboard side post provides information on the operational state of the fume cupboard at eye level.

Sash handle with air guiding function

Air is pushed into the workspace when the sash is opened and pollutant emissions due to the opening sash are prevented. The balanced and free-moving sash mechanism including the release for the sash stop can be operated with one hand.

The automatic sash

The sash is closed automatically if there is nobody working on the fume cupboard. The photoelectric barrier stops the closing process if there are objects protruding from inside the workspace.

New fume cupboard widths available

Our bench-mounted fume cupboards are now also available with a width of 2100 mm, the side-installed fume cupboards with a width of 2400 mm. Of course also with Secuflow technology.

New lighting for the internal workspace

Energy saving lamps that can be switched from the side post illuminate the entire internal workspace.

The barrier-free sitting height fume cupboard

Fume cupboards with side installation are also available wheelchair accessible. The position of all control units provides for optimum ergonomics and freedom of movement when performing work at the fume cupboard while seated.

The best for equipment and variability

Along with the convenient basic equipment, our fume cupboards provide a wide range of variable equipment options. Depending on the application, the worktop is made of stoneware, epoxy resin, polypropylene or stainless steel. Our fume cupboards are mounted with self-supporting underbench units or on a steel support frame. You can install plinth mounted, mobile or solvent cabinets under the fume cupboard.

Service modules that can be equipped as desired

The replaceable service modules are integrated in the rear and side panels of our fume cupboards and ensure the mechanical and electrical services supply. The integrated sink module for water offers more freedom when using the internal workspace.

Our certified test laboratory for fume cupboard measurements

We established our new test laboratory for fume cupboards when the EN 14175 was published. The latest technical equipment and the GS certification by TÜV Product Service GmbH guarantee optimum measurement results with respect to accuracy and reproducibility.

We test fume cupboards in accordance with EN 14175. We can also carry out measurements in accordance with ASHRAE 110/1995.

With our ISO 9001:2008 certification and the GS mark for our entire product range, we have closed the circle in relation to fume cupboard tests and had our test laboratory tested and certified by TÜV Product Service GmbH according to the German law on equipment safety (Gerätesicherheitsgesetz).

Bench-mounted fume cupboards
Bench-mounted fume cupboard

Intended use

- Protective device for the user, tested in acc. with EN 14175
- Extraction of fumes, aerosols and dust from the internal workspace to prevent dangerous amounts of pollutants from escaping into the laboratory
- To prevent the formation of dangerous potentially explosive atmospheres in the internal workspace
- Protection from splashes of hazardous substances
- Protection from flying particles, bodies or parts escaping from the internal workspace
- General fume cupboards constructed in acc. with EN 14175 are normally not suited for use with radioactive substances or microorganisms
- Not suitable for openly breaking down chemicals
- Service outlets in the rear panel of the internal workspace
- Control units located horizontally on the service rail of the support unit

Design

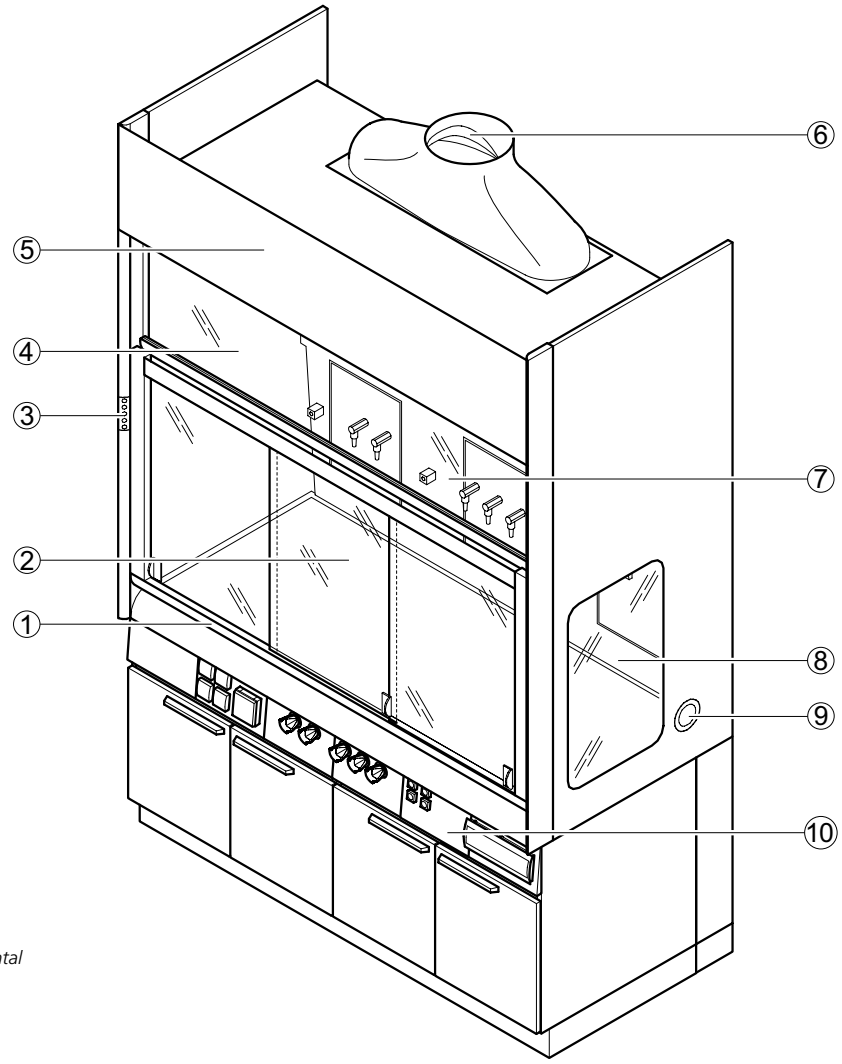

1 *Sash with handle and horizontal sashes*
2 *Worktop*
3 *FAZ or AC control panel*
4 *Upper sash window*
5 *Removable fascia panel*
6 *Extract manifold*
7 *Baffle with service modules*
8 *Glass pane in the side wall*
9 *Material lock*
10 *Self-supporting underbench unit with support and service panels*

Dimensional drawing

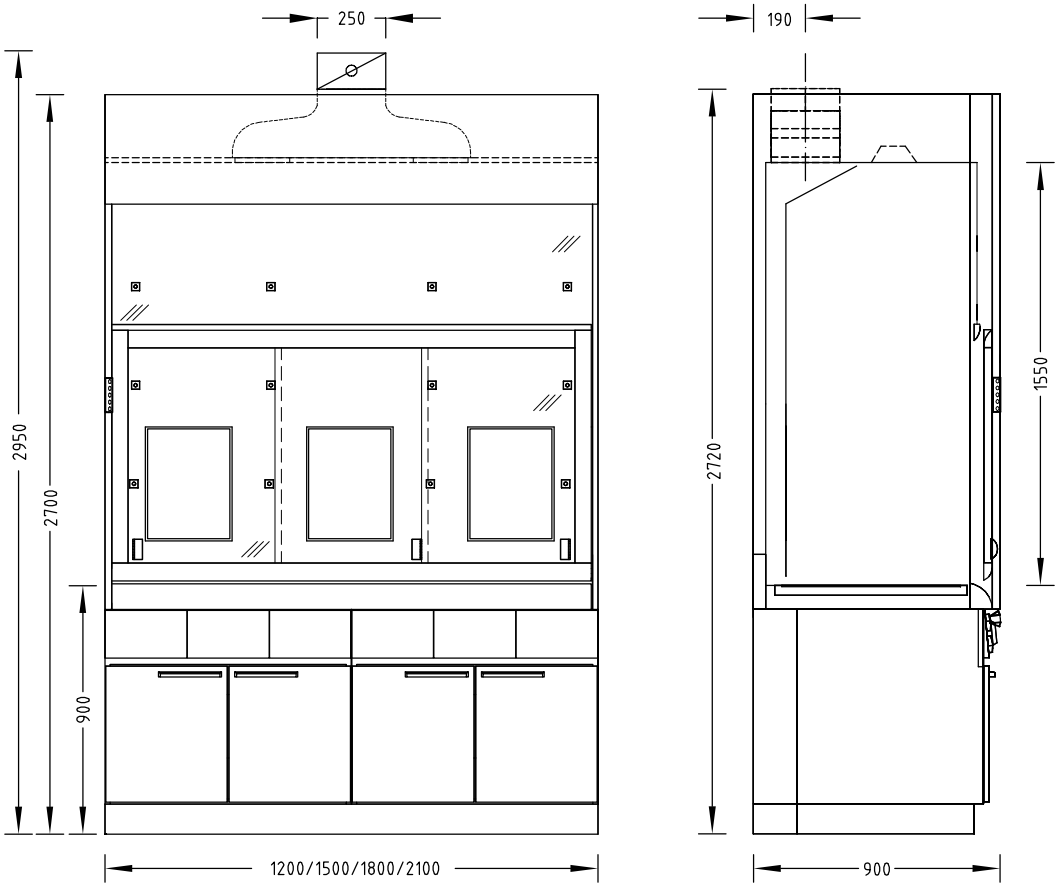

Technical data

Dimensions	1200	1500	1800	2100
Width [mm]	1200	1500	1800	2100
Depth [mm]	900			
Height [mm]	2700			
Clear width, internal workspace [mm]	1150	1450	1750	2050
Clear height, internal workspace [mm]	1550			
Working height [mm]	900			

Weight	1200	1500	1800	2100
Without installation [kg]	Approx. 250	Approx. 300	Approx. 350	Approx. 400

Bench-mounted fume cupboards
Bench-mounted fume cupboard

Design characteristics	1200	1500	1800	2100
Supporting construction	Self-supporting underbench units or H-frame with push-in underbench units			
Sash	2 horizontal sashes		3 horizontal sashes	
Side panel of the fume cupboard	Glass pane on the left and/or right as an option; not with stoneware internal lining Material lock on the left and/or right as an option; not with stoneware internal lining			
Number of devices for scaffold points, ø 12 to 13 mm	9		12	
Service modules	2		3	

Electrics	
Electrical supply	External sockets in service panels Internal sockets in service modules
Fuse box	Optional
Sash controller SC	Optional

Sanitary technology	
Sanitary supply	Service modules with take-off valves for vacuum, gases and/or waters and integrated sink (PP) as an option

Ventilation technology	1200	1500	1800	2100
Minimum air exchange rate [m³/h] [1]	480	600	720	840
Function display	FAZ			
Airflow damper, constant	Airflow-Controller AC			
Airflow damper, variable	Airflow-Controller AC			
Detector of sash position	Only variable with Airflow-Controller AC			
Connection height [mm] for FAZ with extract manifold Ø 250 mm	2720			
Connection height [mm] for FAZ with extract manifold Ø 315 mm [2]	2830			
Connection height [mm] for AC with extract manifold Ø 250 mm	2950			
Connection height [mm] for AC with extract manifold Ø 315 mm [2]	3070			
Underbench exhaust	As an option, depending on requirements and regulations			

[1] All air volume specifications refer to an opening height of the sash window of 500 mm (test opening in acc. with EN 14175) and the maximum tracer gas values recommended by German Standard (BG Chemie). Shown rates correspond to a face velocity of 0.24 m/s. For other design face velocities, please contact your Waldner sales representative.

[2] In order to minimise noise and pressure losses, for air volumes >1000 m³/h Waldner recommends using the extract manifold with a connection diameter of 315 mm.

A maximum admission pressure of 600 Pa should not be exceeded in the case of fume cupboards with airflow dampers.
The indicated minimum air exchange rates were determined under specified test conditions in acc. with EN 14175-3. These minimum air exchange rates must be adapted when dimensioning the ventilation system
If on-site extract air monitoring systems or airflow dampers are used, the required air volumes may be different. The operating limitations must be agreed upon with Waldner.

Material/surface	
Worktop	Stoneware Polypropylene Epoxy Stainless steel
Internal lining	Melamine resin facing Solid grade laminate Stoneware

Low ceiling bench-mounted fume cupboard

Intended use

- Protective device for the user, tested in acc. with EN 14175
- Extraction of fumes, aerosols and dust from the internal workspace to prevent dangerous amounts of pollutants from escaping into the laboratory
- To prevent the formation of dangerous potentially explosive atmospheres in the internal workspace
- Protection from splashes of hazardous substances
- Protection from flying particles, bodies or parts escaping from the internal workspace
- General fume cupboards constructed in acc. with EN 14175 are normally not suited for use with radioactive substances or microorganisms
- Not suitable for openly breaking down chemicals
- Service outlets in the rear panel of the internal workspace
- Control units located horizontally on the service rail of the support unit
- Suitable for rooms with low ceiling height

Design

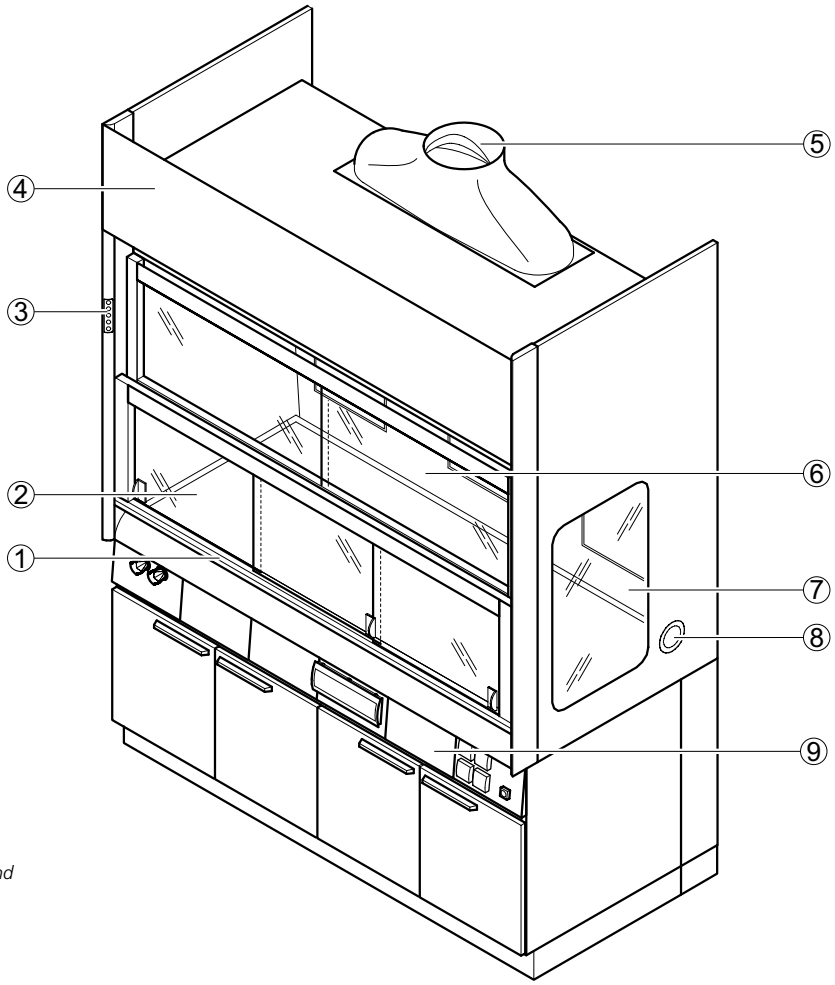

1 *Two-piece sash with handle and horizontal sashes*
2 *Worktop*
3 *FAZ or AC control panel*
4 *Removable fascia panel*
5 *Extract manifold*
6 *Baffle with service modules*
7 *Glass pane in the side wall*
8 *Material lock*
9 *Self-supporting underbench unit with support and service panels*

Bench-mounted fume cupboards
Low ceiling bench-mounted fume cupboard

Dimensional drawing

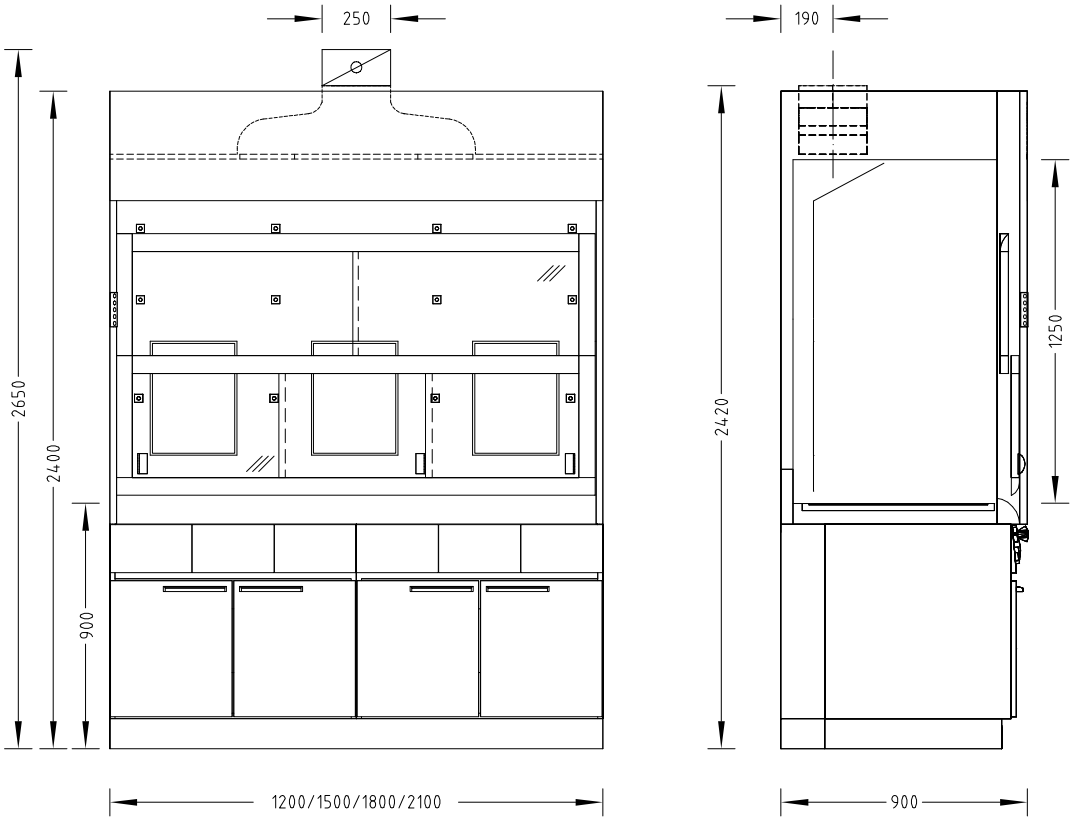

Technical data

Dimensions	1200	1500	1800	2100
Width [mm]	1200	1500	1800	2100
Depth [mm]	900			
Height [mm]	2400			
Clear width, internal workspace [mm]	1150	1450	1750	2050
Clear height, internal workspace [mm]	1250			
Working height [mm]	900			

Weight	1200	1500	1800	2100
Without installation [kg]	Approx. 220	Approx. 260	Approx. 300	Approx. 350

Design characteristics	1200	1500	1800	2100
Supporting construction	Self-supporting underbench units or H-frame with push-in underbench units			
Two-piece sash	2 horizontal sashes		3 horizontal sashes	
Side panel of the fume cupboard	Glass pane on the left and/or right as an option; not with stoneware internal lining Material lock on the left and/or right as an option; not with stoneware internal lining			
Max. number of devices for scaffold points, ø 12 to 13 mm	9		12	
Service modules	2		3	

Bench-mounted fume cupboards
Low ceiling bench-mounted fume cupboard

Electrics	
Electrical supply	External sockets in service panels Internal sockets in service modules
Fuse box	Optional
Sash controller SC	Optional

Sanitary technology	
Sanitary supply	Service modules with take-off valves for vacuum, gases and/or waters and integrated sink (PP) as an option

Ventilation technology	1200	1500	1800	2100
Minimum air exchange rate [m³/h] [1]	480	600	720	840
Function display	FAZ			
Airflow damper, constant	Airflow-Controller AC			
Airflow damper, variable	Airflow-Controller AC			
Detector of sash position	Only variable with Airflow-Controller AC			
Connection height [mm] for FAZ with extract manifold Ø 250 mm	2420			
Connection height [mm] for FAZ with extract manifold Ø 315 mm [2]	2530			
Connection height [mm] for AC with extract manifold Ø 250 mm	2650			
Connection height [mm] for AC with extract manifold Ø 315 mm [2]	2770			
Underbench exhaust	As an option, depending on requirements and regulations			

[1] All air volume specifications refer to an opening height of the sash window of 500 mm (test opening in acc. with EN 14175) and the maximum tracer gas values recommended by German Standard (BG Chemie). Shown rates correspond to a face velocity of 0.24 m/s. For other design face velocities, please contact your Waldner sales representative.

[2] In order to minimise noise and pressure losses, for air volumes >1000 m³/h Waldner recommends using the extract manifold with a connection diameter of 315 mm.

A maximum admission pressure of 600 Pa should not be exceeded in the case of fume cupboards with airflow dampers.
The indicated minimum air exchange rates were determined under specified test conditions in acc. with EN 14175-3. These minimum air exchange rates must be adapted when dimensioning the ventilation system.
If on-site extract air monitoring systems or airflow dampers are used, the required air volumes may be different. The operating limitations must be agreed upon with Waldner.

Material/surface	
Worktop	Stoneware Polypropylene Stainless steel Epoxy
Internal lining	Melamine resin facing Solid grade laminate Stoneware

Bench-mounted fume cupboards
Secuflow bench-mounted fume cupboard

Intended use

- Protective device for the user, tested in acc. with EN 14175
- Extraction of fumes, aerosols and dust from the internal workspace to prevent dangerous amounts of pollutants from escaping into the laboratory
- To prevent the formation of dangerous potentially explosive atmospheres in the internal workspace
- Protection from splashes of hazardous substances
- Protection from flying particles, bodies or parts escaping from the internal workspace
- General fume cupboards constructed in acc. with EN 14175 are normally not suited for use with radioactive substances or microorganisms
- Not suitable for openly breaking down chemicals
- Active supportive flow technology (Secuflow technology) reduces the energy consumption while regulations and standards are observed
- Service outlets in the rear panel of the internal workspace
- Control units located horizontally on the service rail of the support unit

Design

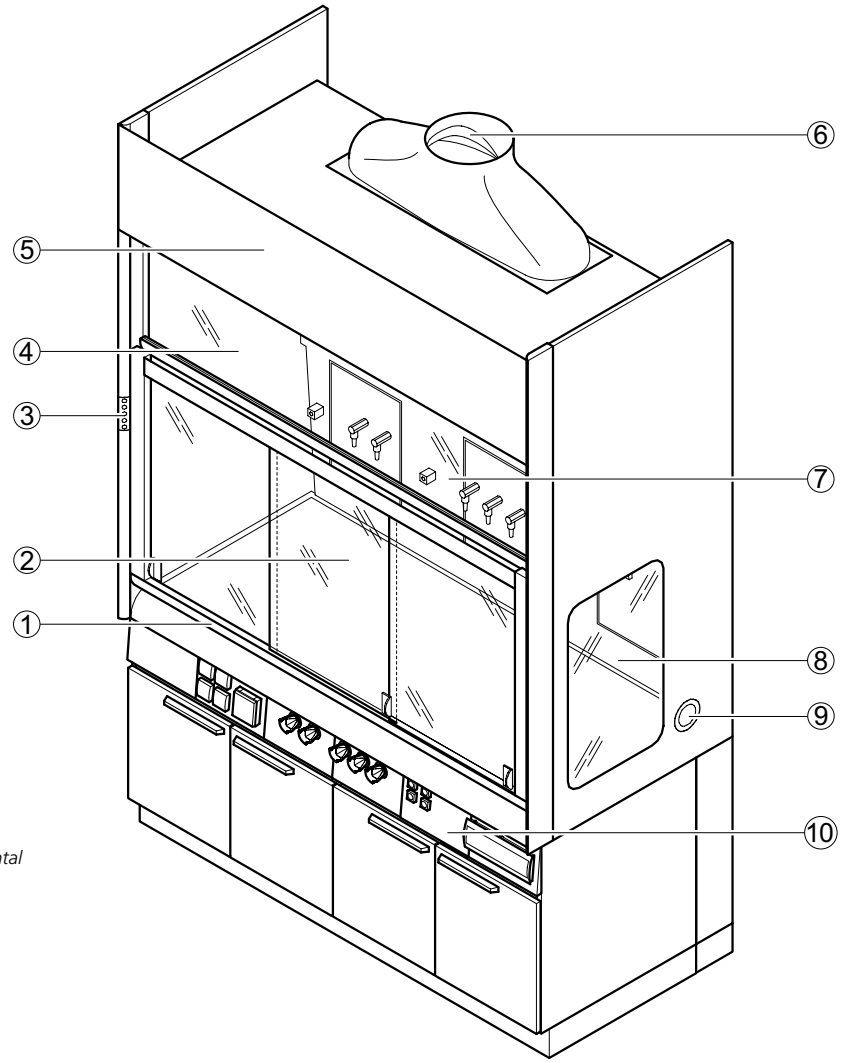

1 *Sash with handle and horizontal sashes*
2 *Worktop*
3 *FAZ or AC control panel*
4 *Upper sash window*
5 *Removable fascia panel*
6 *Extract manifold*
7 *Baffle with service modules*
8 *Glass pane in the side wall*
9 *Material lock*
10 *Self-supporting underbench unit with support and service panels*

Dimensional drawing

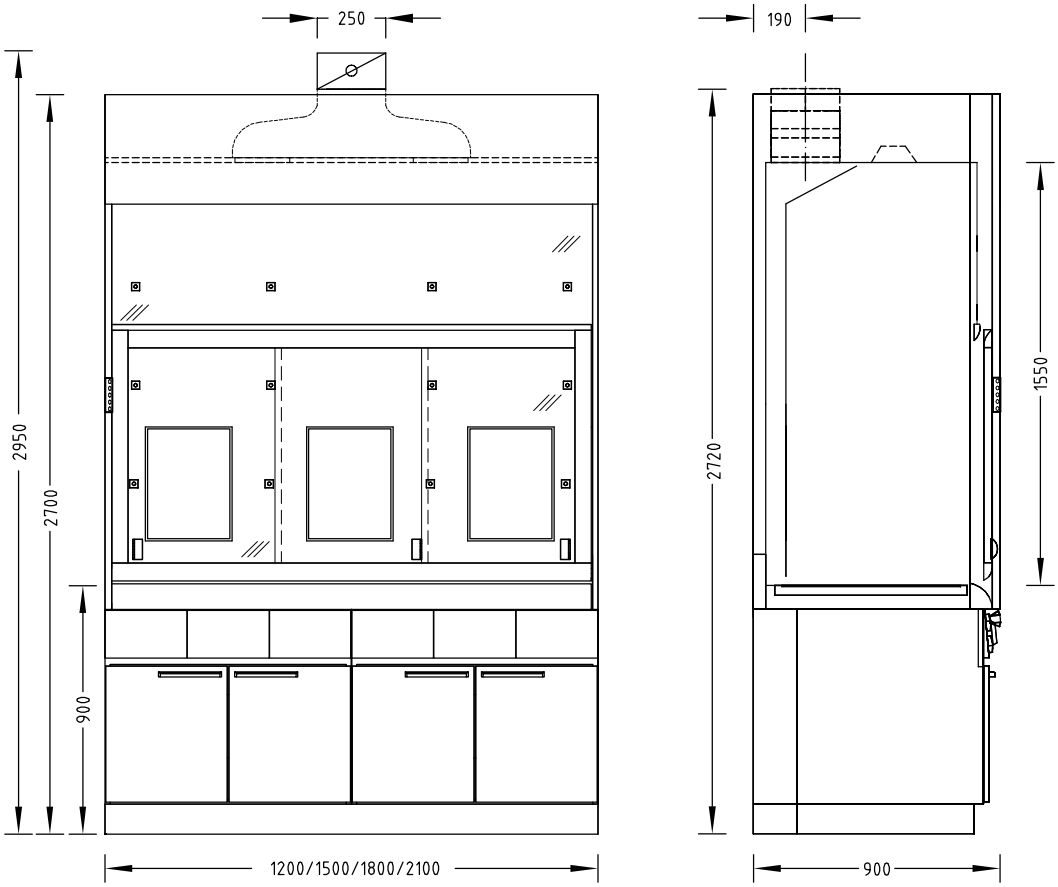

Technical data

Dimensions	1200	1500	1800	2100
Width [mm]	1200	1500	1800	2100
Depth [mm]	900			
Height [mm]	2700			
Clear width, internal workspace [mm]	1150	1450	1750	2050
Clear height, internal workspace [mm]	1550			
Working height [mm]	900			

Weight	1200	1500	1800	2100
Without installation [kg]	Approx. 250	Approx. 300	Approx. 350	Approx. 400

Bench-mounted fume cupboards
Secuflow bench-mounted fume cupboard

Design characteristics	1200	1500	1800	2100
Supporting construction	Self-supporting underbench units or H-frame with push-in underbench units			
Sash	2 horizontal sashes		3 horizontal sashes	
Side panel of the fume cupboard	Glass pane on the left and/or right as an option; not with stoneware internal lining Material lock on the left and/or right as an option; not with stoneware internal lining			
Max. number of devices for scaffold points, ø 12 mm to 13 mm	9		12	
Service modules	2		3	

Electrics	
Electrical supply	External sockets in service panels Internal sockets in service modules
Fuse box	Optional
Sash controller SC	Optional

Sanitary technology	
Sanitary supply	Service modules with take-off valves for vacuum, gases and/or waters and integrated sink (PP) as an option

Ventilation technology	1200	1500	1800	2100
Minimum air exchange rate [m³/h] [1]	330	410	490	570
Function display	FAZ			
Airflow damper, constant	Airflow-Controller AC			
Airflow damper, variable	Airflow-Controller AC			
Detector of sash position	Only variable with Airflow-Controller AC			
Connection height [mm] for FAZ with extract manifold Ø 250 mm	2720			
Connection height [mm] for FAZ with extract manifold Ø 315 mm [2]	2830			
Connection height [mm] for AC with extract manifold Ø 250 mm	2950			
Connection height [mm] for AC with extract manifold Ø 315 mm [2]	3070			
Underbench exhaust	As an option, depending on requirements and regulations			

[1] All air volume specifications refer to an opening height of the sash window of 500 mm (test opening in acc. with EN 14175) and the maximum tracer gas values recommended by German Standard (BG Chemie). Shown rates correspond to a face velocity of 0.15 m/s. For other design face velocities, please contact your Waldner sales representative.

[2] In order to minimise noise and pressure losses, for air volumes >1000 m³/h Waldner recommends using the extract manifold with a connection diameter of 315 mm.

A maximum admission pressure of 600 Pa should not be exceeded in the case of fume cupboards with airflow dampers. The indicated minimum air exchange rates were determined under specified test conditions in acc. with EN 14175-3. These minimum air exchange rates must be adapted when dimensioning the ventilation system.
If on-site extract air monitoring systems or airflow dampers are used, the required air volumes may be different. The operating limitations must be agreed upon with Waldner.

Material/surface	
Worktop	Stoneware Polypropylene Stainless steel Epoxy
Internal lining	Melamine resin facing Solid grade laminate Stoneware

Bench-mounted fume cupboards
Secuflow low ceiling bench-mounted fume cupboard

Intended use

- Protective device for the user, tested in acc. with EN 14175
- Extraction of fumes, aerosols and dust from the internal workspace to prevent dangerous amounts of pollutants from escaping into the laboratory
- To prevent the formation of dangerous potentially explosive atmospheres in the internal workspace
- Protection from splashes of hazardous substances
- Protection from flying particles, bodies or parts escaping from the internal workspace
- General fume cupboards constructed in acc. with EN 14175 are normally not suited for use with radioactive substances or microorganisms
- Not suitable for openly breaking down chemicals
- Active supportive flow technology (Secuflow technology) reduces the energy consumption while regulations and standards are observed
- Service outlets in the rear panel of the internal workspace
- Control units located horizontally on the service rail of the support unit
- Suitable for rooms with low ceiling height

Design

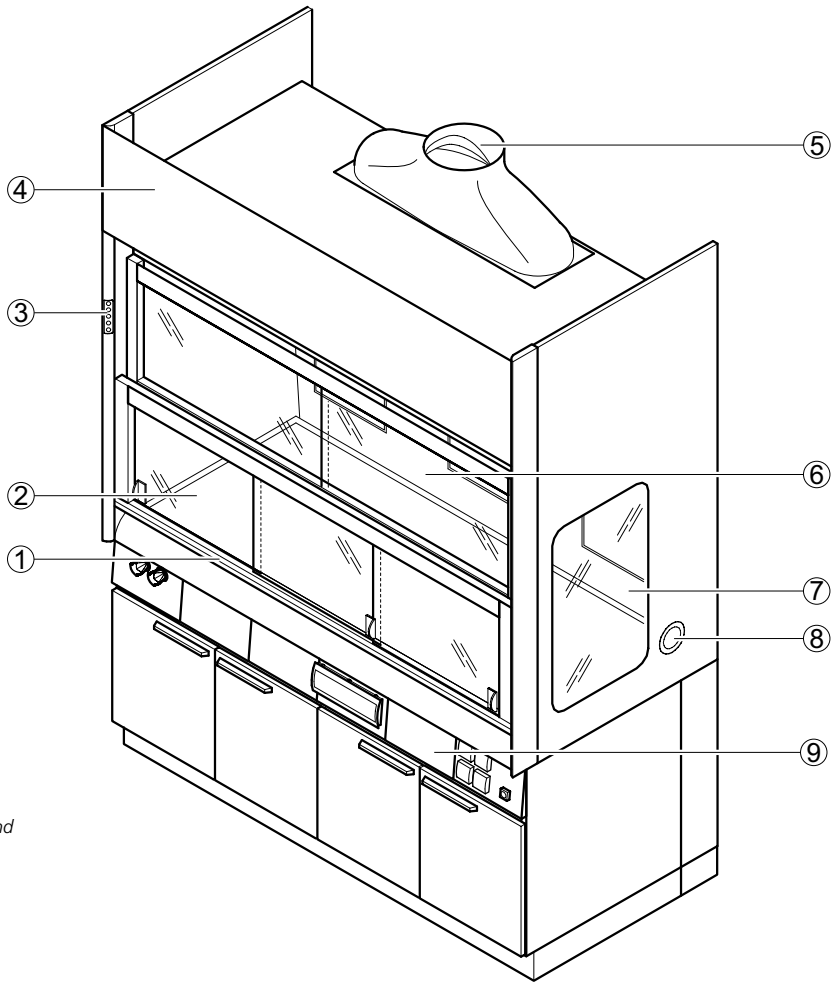

1 *Two-piece sash with handle and horizontal sashes*
2 *Worktop*
3 *FAZ or AC control panel*
4 *Removable fascia panel*
5 *Extract manifold*
6 *Baffle with service panel*
7 *Glass pane in the side wall*
8 *Material lock*
9 *Self-supporting underbench unit with support and service panels*

Bench-mounted fume cupboards
Secuflow low ceiling bench-mounted fume cupboard

Dimensional drawing

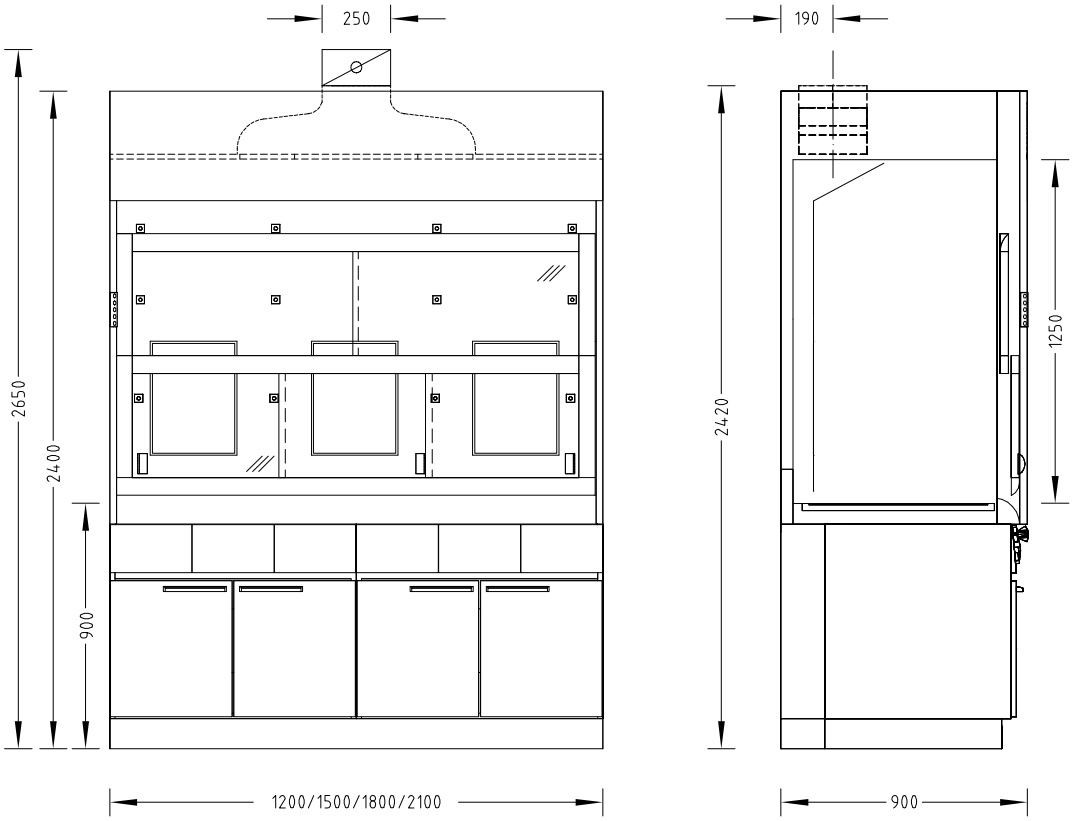

Technical data

Dimensions	1200	1500	1800	2100
Width [mm]	1200	1500	1800	2100
Depth [mm]	900			
Height [mm]	2400			
Clear width, internal workspace [mm]	1150	1450	1750	2050
Clear height, internal workspace [mm]	1250			
Working height [mm]	900			

Weight	1200	1500	1800	2100
Without installation [kg]	Approx. 220	Approx. 260	Approx. 300	Approx. 350

Design characteristics	1200	1500	1800	2100
Supporting construction	Self-supporting underbench units or H-frame with push-in underbench units			
Two-piece sash	2 horizontal sashes		3 horizontal sashes	
Side panel of the fume cupboard	Glass pane on the left and/or right as an option; not with stoneware internal lining Material lock on the left and/or right as an option; not with stoneware internal lining			
Max. number of devices for scaffold points, ø 12 to 13 mm	9		12	
Service modules	2		3	

Bench-mounted fume cupboards
Secuflow low ceiling bench-mounted fume cupboard

Electrics	
Electrical supply	External sockets in service panels Internal sockets in service modules
Fuse box	Optional
Sash controller SC	Optional

Sanitary technology	
Sanitary supply	Service modules with take-off valves for vacuum, gases and/or waters and integrated sink (PP) as an option

Ventilation technology	1200	1500	1800	2100
Minimum air exchange rate [m³/h] [1]	330	410	490	570
Function display	FAZ			
Airflow damper, constant	Airflow-Controller AC			
Airflow damper, variable	Airflow-Controller AC			
Detector of sash position	Only variable with Airflow-Controller AC			
Connection height [mm] for FAZ with extract manifold Ø 250 mm	2420			
Connection height [mm] for FAZ with extract manifold Ø 315 mm [2]	2530			
Connection height [mm] for AC with extract manifold Ø 250 mm	2650			
Connection height [mm] for AC with extract manifold Ø 315 mm [2]	2770			
Underbench exhaust	As an option, depending on requirements and regulations			

[1] All air volume specifications refer to an opening height of the sash window of 500 mm (test opening in acc. with EN 14175) and the maximum tracer gas values recommended by German Standard (BG Chemie). Shown rates correspond to a face velocity of 0.15 m/s. For other design face velocities, please contact your Waldner sales representative.

[2] In order to minimise noise and pressure losses, for air volumes >1000 m³/h Waldner recommends using the extract manifold with a connection diameter of 315 mm.

A maximum admission pressure of 600 Pa should not be exceeded in the case of fume cupboards with airflow dampers.
The indicated minimum air exchange rates were determined under specified test conditions in acc. with EN 14175-3. These minimum air exchange rates must be adapted when dimensioning the ventilation system.
If on-site extract air monitoring systems or airflow dampers are used, the required air volumes may be different. The operating limitations must be agreed upon with Waldner.

Material/surface	
Worktop	Stoneware Polypropylene Epoxy Stainless steel
Internal lining	Melamine resin facing Solid grade laminate Stoneware

Bench-mounted fume cupboards with side installation

Bench-mounted fume cupboard with side installation

Intended use

- Protective device for the user, tested in acc. with EN 14175
- Extraction of fumes, aerosols and dust from the internal workspace to prevent dangerous amounts of pollutants from escaping into the laboratory
- To prevent the formation of dangerous potentially explosive atmospheres in the internal workspace
- Protection from splashes of hazardous substances
- Protection from flying particles, bodies or parts escaping from the internal workspace
- General fume cupboards constructed in acc. with EN 14175 are normally not suited for use with radioactive substances or microorganisms
- Not suitable for openly breaking down chemicals
- Service outlets in the service modules of the side panels of the internal workspace
- Control units located vertically on the side service panels

Design

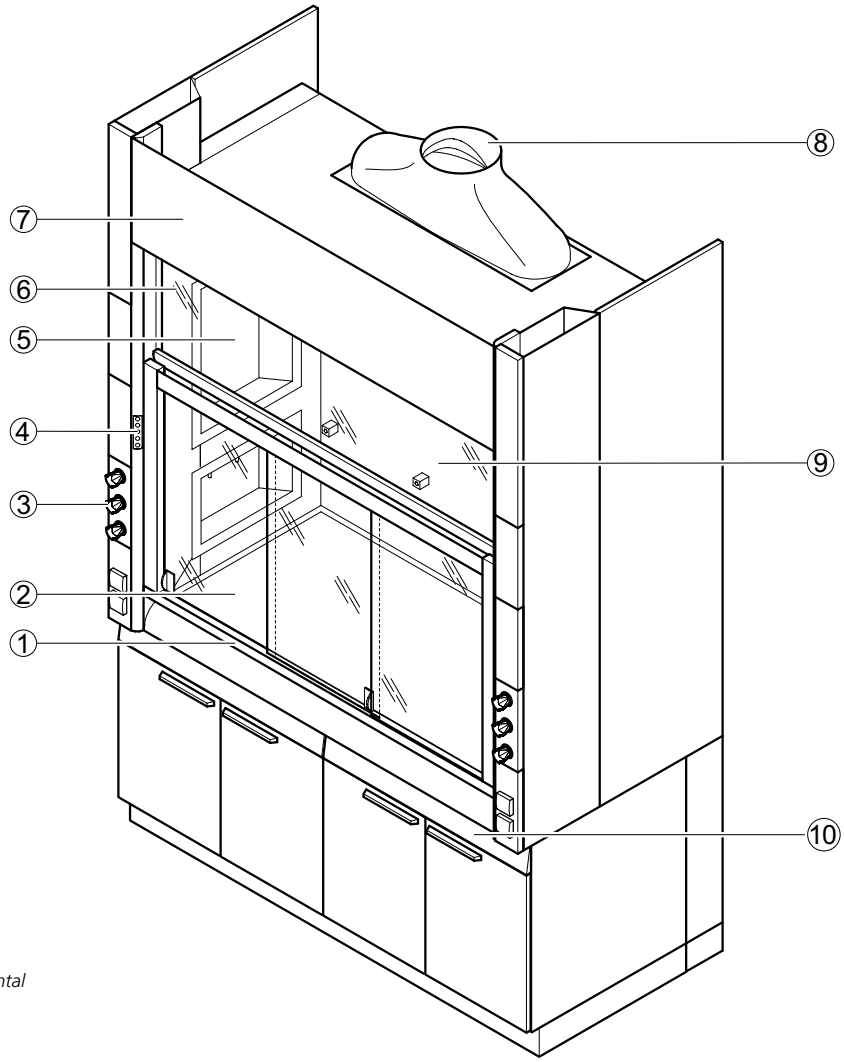

1 *Sash with handle and horizontal sashes*
2 *Worktop*
3 *Service panel*
4 *FAZ or AC control panel*
5 *Service modules in the side panel of the fume cupboard*
6 *Upper sash window*
7 *Removable fascia panel*
8 *Extract manifold*
9 *Baffle with scaffold points*
10 *Self-supporting underbench unit*

Dimensional drawing

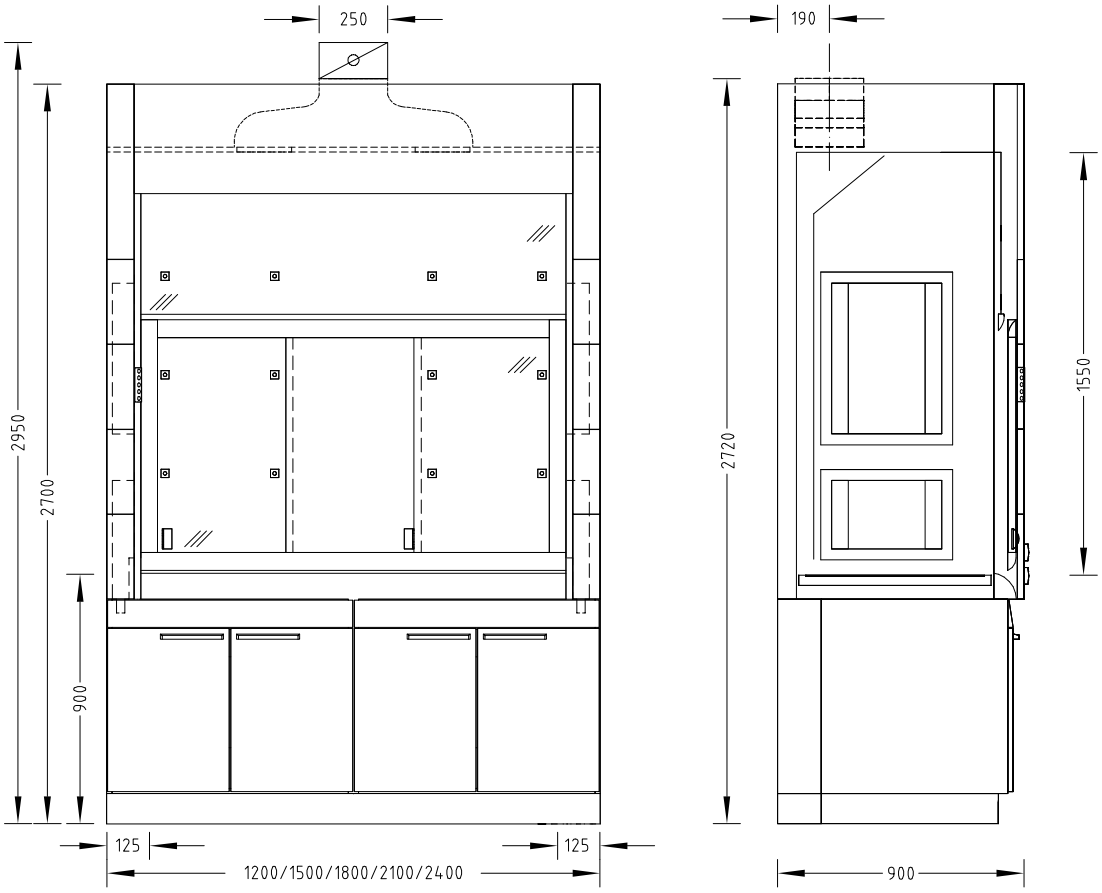

Technical data

Dimensions	1200	1500	1800	2100	2400
Width [mm]	1200	1500	1800	2100	2400
Depth [mm]			900		
Height [mm]			2700		
Clear width, internal workspace [mm]	950	1250	1550	1850	2150
Clear height, internal workspace [mm]			1550		
Working height [mm]			900		

Weight	1200	1500	1800	2100	2400
Without installation [kg]	Approx. 320	Approx. 390	Approx. 450	Approx. 510	Approx. 570

Bench-mounted fume cupboards with side installation
Bench-mounted fume cupboard with side installation

Design characteristics	1200	1500	1800	2100	2400
Supporting construction	Self-supporting underbench units or H-frame with push-in underbench units				
Sash	2 horizontal sashes		3 horizontal sashes		
Side panel of the fume cupboard	Glass pane on the left and/or right as an option; not if service modules are installed in the side panel of the fume cupboard Material lock on the left and/or right as an option				
Max. number of devices for scaffold points, ø 12 to 13 mm	9	12			15
Service modules	Service modules in the left and/or right side panel of the fume cupboard, depending on requirement				

Electrics	
Electrical supply	External sockets in service panels Internal sockets in service modules
Fuse box	Optional
Sash controller SC	Optional

Sanitary technology	
Sanitary supply	Service modules with take-off valves for vacuum, gases and/or waters and integrated sink (PP) as an option

Ventilation technology	1200	1500	1800	2100	2400
Minimum air exchange rate [m³/h] [1]	420	530	630	740	840
Function display	FAZ				
Airflow damper, constant	Airflow-Controller AC				
Airflow damper, variable	Airflow-Controller AC				
Detector of sash position	Only variable with Airflow-Controller AC				
Connection height [mm] for FAZ with extract manifold Ø 250 mm	2720				
Connection height [mm] for FAZ with extract manifold Ø 315 mm [2]	2830				
Connection height [mm] for AC with extract manifold Ø 250 mm	2950				
Connection height [mm] for AC with extract manifold Ø 315 mm [2]	3070				
Underbench exhaust	As an option, depending on requirements and regulations				

[1] All air volume specifications refer to an opening height of the sash window of 500 mm (test opening in acc. with EN 14175) and the maximum tracer gas values recommended by German Standard (BG Chemie). Shown rates correspond to a face velocity of 0.24 m/s. For other design face velocities, please contact your Waldner sales representative.

[2] In order to minimise noise and pressure losses, for air volumes >1000 m³/h Waldner recommends using the extract manifold with a connection diameter of 315 mm.

A maximum admission pressure of 600 Pa should not be exceeded in the case of fume cupboards with airflow dampers. The indicated minimum air exchange rates were determined under specified test conditions in acc. with EN 14175-3. These minimum air exchange rates must be adapted when dimensioning the ventilation system.
If on-site extract air monitoring systems or airflow dampers are used, the required air volumes may be different. The operating limitations must be agreed upon with Waldner.

Material/surface	
Worktop	Stoneware (not for bench-mounted fume cupboard with a width of 2400 mm) Polypropylene Epoxy Stainless steel
Internal lining	Solid grade laminate Stainless steel

Low ceiling bench-mounted fume cupboard with side installation

Intended use

- Protective device for the user, tested in acc. with EN 14175
- Extraction of fumes, aerosols and dust from the internal workspace to prevent dangerous amounts of pollutants from escaping into the laboratory
- To prevent the formation of dangerous potentially explosive atmospheres in the internal workspace
- Protection from splashes of hazardous substances
- Protection from flying particles, bodies or parts escaping from the internal workspace
- General fume cupboards constructed in acc. with EN 14175 are normally not suited for use with radioactive substances or microorganisms
- Not suitable for openly breaking down chemicals
- Service outlets in the service modules of the side panels of the internal workspace
- Control units located vertically on the side service panels
- Suitable for rooms with low ceiling height

Design

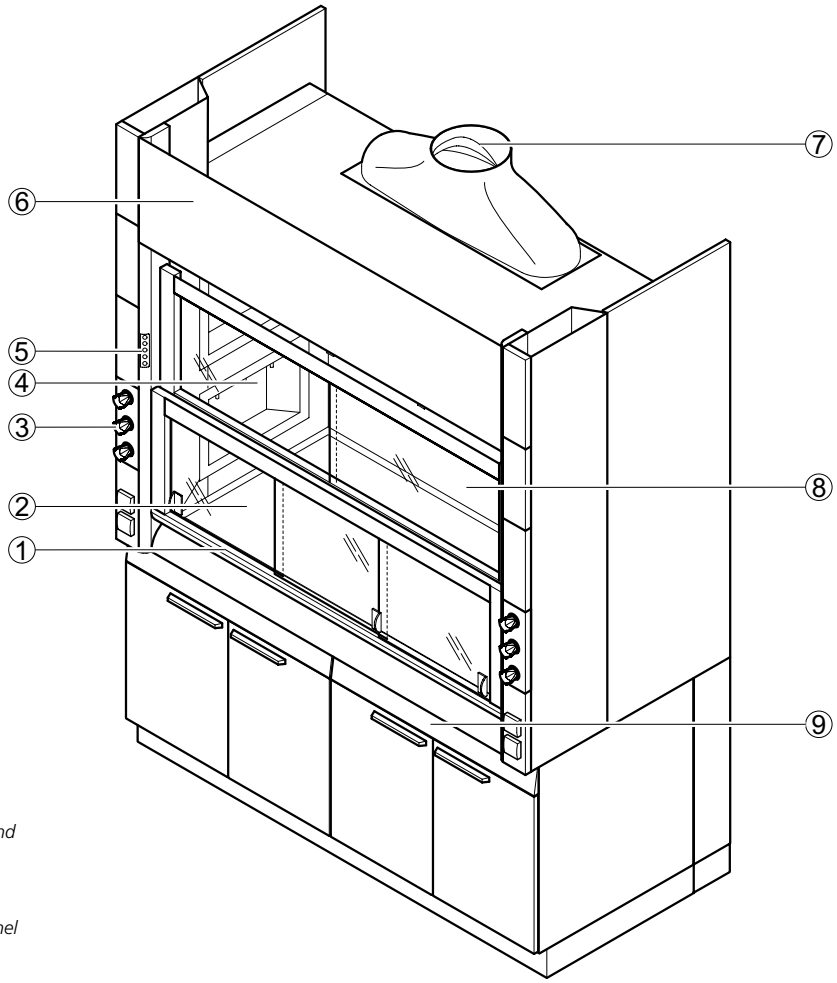

1 *Two-piece sash with handle and horizontal sashes*
2 *Worktop*
3 *Service panel*
4 *Service module in the side panel of the fume cupboard*
5 *FAZ or AC control panel*
6 *Removable fascia panel*
7 *Extract manifold*
8 *Baffle with scaffold points*
9 *Self-supporting underbench unit*

Bench-mounted fume cupboards with side installation
Low ceiling bench-mounted fume cupboard with side installation

Dimensional drawing

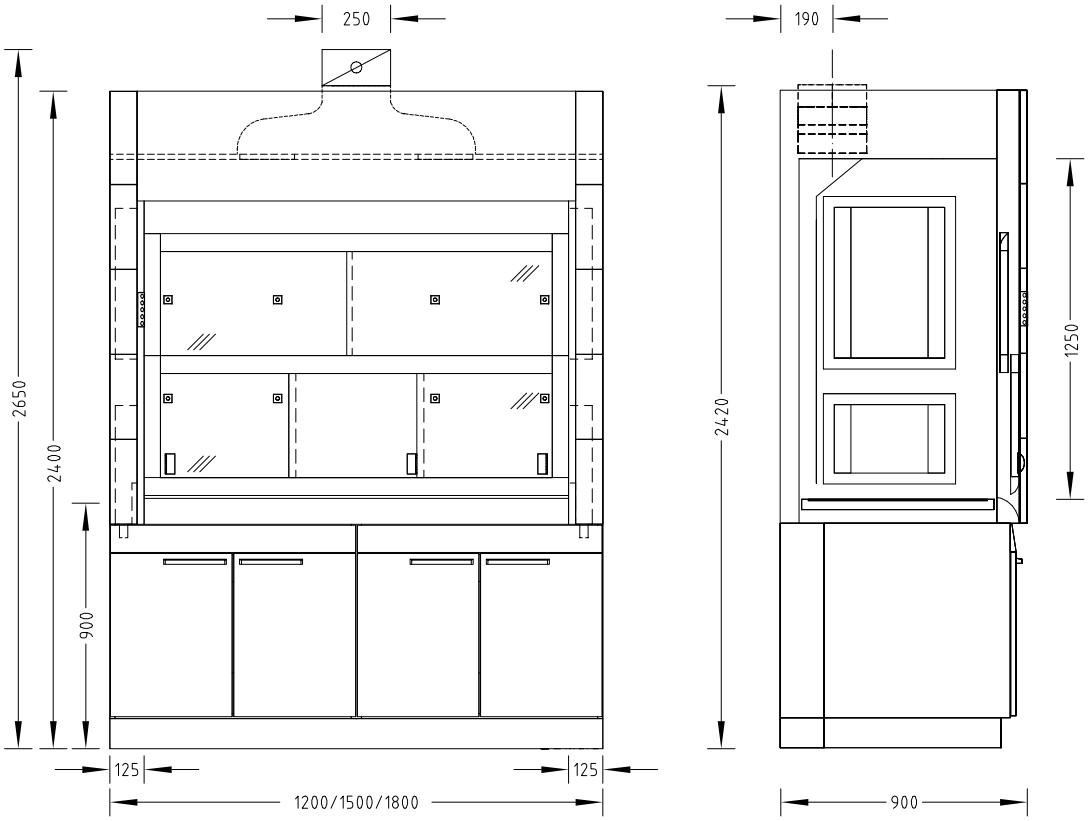

Technical data

Dimensions	1200	1500	1800
Width [mm]	1200	1500	1800
Depth [mm]		900	
Height [mm]		2400	
Clear width, internal workspace [mm]	950	1250	1550
Clear height, internal workspace [mm]		1250	
Working height [mm]		900	

Weight	1200	1500	1800
Without installation [kg]	Approx. 220	Approx. 260	Approx. 300

Design characteristics	1200	1500	1800
Supporting construction	Self-supporting underbench units or H-frame with push-in underbench units		
Two-piece sash	2 horizontal sashes		3 horizontal sashes
Side panel of the fume cupboard	Glass pane on the left and/or right as an option; not if service modules are installed in the side panel of the fume cupboard, not with stoneware internal lining Material lock on the left and/or right as an option		
Max. number of devices for scaffold points, ø 12 to 13 mm	6	8	
Service modules	Service modules in the left and/or right side panel of the fume cupboard, depending on requirement		

Bench-mounted fume cupboards with side installation
Low ceiling bench-mounted fume cupboard with side installation

Electrics	
Electrical supply	External sockets in service panels Internal sockets in service modules
Fuse box	Optional
Sash controller SC	Optional

Sanitary technology	
Sanitary supply	Service modules with take-off valves for vacuum, gases and/or waters and integrated sink (PP) as an option

Ventilation technology	1200	1500	1800
Minimum air exchange rate [m³/h] [1]	420	530	630
Function display	FAZ		
Airflow damper, constant	Airflow-Controller AC		
Airflow damper, variable	Airflow-Controller AC		
Detector of sash position	Only variable with Airflow-Controller AC		
Connection height [mm] for FAZ with extract manifold Ø 250 mm	2420		
Connection height [mm] for FAZ with extract manifold Ø 315 mm [2]	2530		
Connection height [mm] for AC with extract manifold Ø 250 mm	2650		
Connection height [mm] for AC with extract manifold Ø 315 mm [2]	2770		
Underbench exhaust	As an option, depending on requirements and regulations		

[1] All air volume specifications refer to an opening height of the sash window of 500 mm (test opening in acc. with EN 14175) and the maximum tracer gas values recommended by German Standard (BG Chemie). Shown rates correspond to a face velocity of 0.24 m/s. For other design face velocities, please contact your Waldner sales representative.

[2] In order to minimise noise and pressure losses, for air volumes >1000 m³/h Waldner recommends using the extract manifold with a connection diameter of 315 mm.

A maximum admission pressure of 600 Pa should not be exceeded in the case of fume cupboards with airflow dampers.
The indicated minimum air exchange rates were determined under specified test conditions in acc. with EN 14175-3. These minimum air exchange rates must be adapted when dimensioning the ventilation system.
If on-site extract air monitoring systems or airflow dampers are used, the required air volumes may be different. The operating limitations must be agreed upon with Waldner.

Material/surface	
Worktop	Stoneware Polypropylene Epoxy Stainless steel
Internal lining	Solid grade laminate Stainless steel

Bench-mounted fume cupboards with side installation

Secuflow bench-mounted fume cupboard with side installation

Intended use

- Protective device for the user, tested in acc. with EN 14175
- Extraction of fumes, aerosols and dust from the internal workspace to prevent dangerous amounts of pollutants from escaping into the laboratory
- To prevent the formation of dangerous potentially explosive atmospheres in the internal workspace
- Protection from splashes of hazardous substances
- Protection from flying particles, bodies or parts escaping from the internal workspace
- General fume cupboards constructed in acc. with EN 14175 are normally not suited for use with radioactive substances or microorganisms
- Not suitable for openly breaking down chemicals
- Active supportive flow technology (Secuflow technology) reduces the energy consumption while regulations and standards are observed
- Service outlets in the service modules of the side panels of the internal workspace
- Control units located vertically on the side service panels

Design

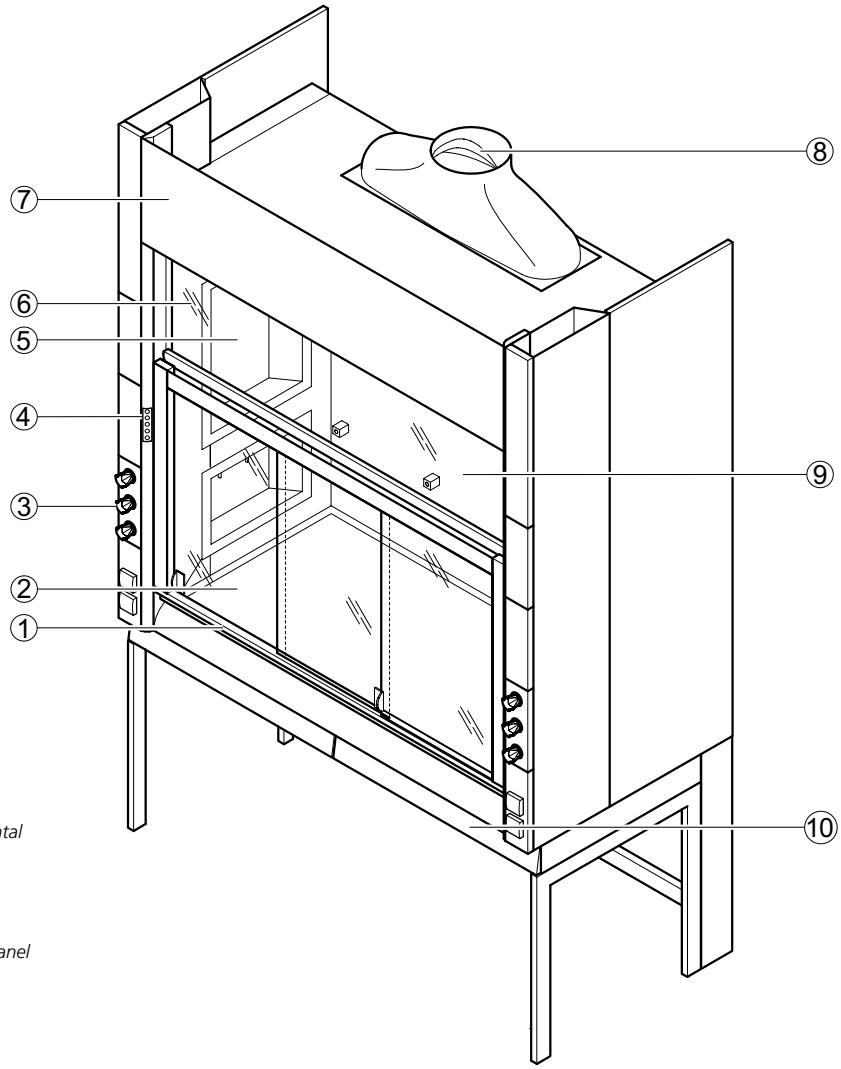

1 *Sash with handle and horizontal sashes*
2 *Worktop*
3 *Service panel*
4 *FAZ or AC control panel*
5 *Service modules in the side panel of the fume cupboard*
6 *Upper sash window*
7 *Removable fascia panel*
8 *Extract manifold*
9 *Baffle with scaffold points*
10 *Support frame with push-in underbench units as an option*

Bench-mounted fume cupboards with side installation
Secuflow bench-mounted fume cupboard with side installation

Dimensional drawing

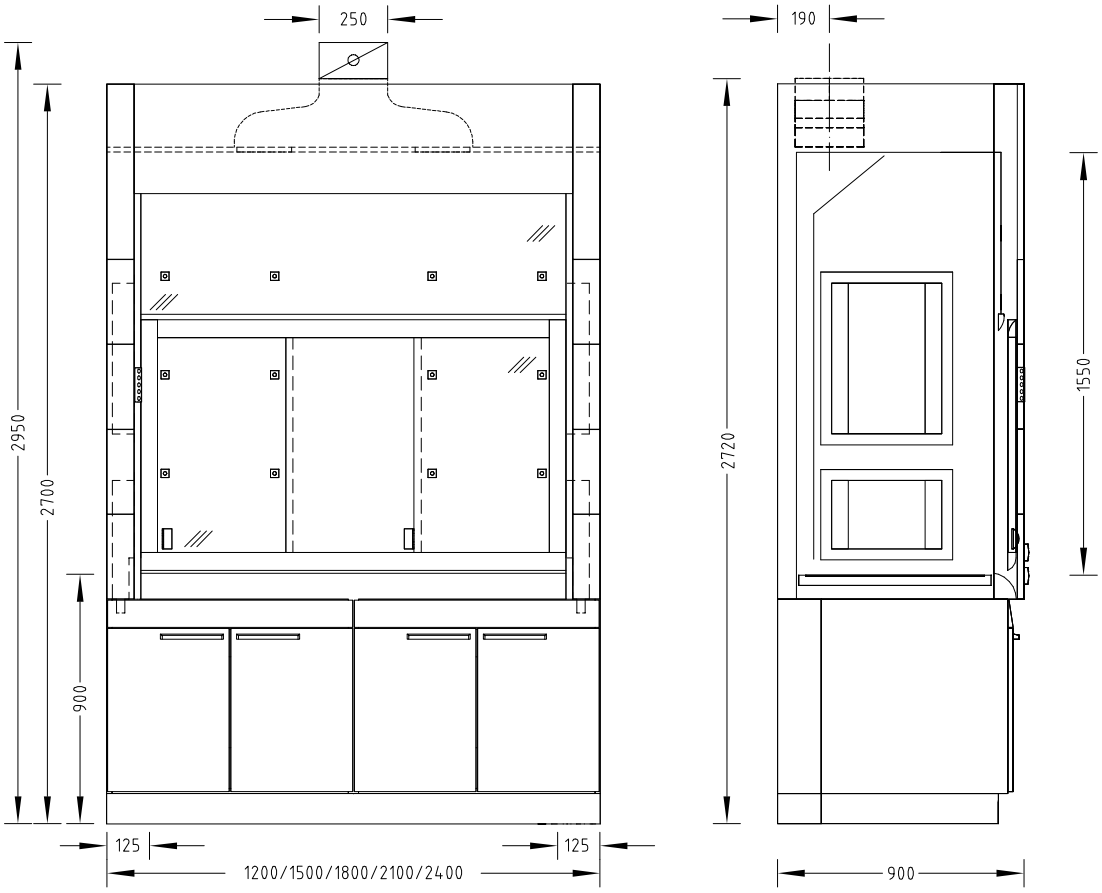

Technical data

Dimensions	1200	1500	1800	2100	2400
Width [mm]	1200	1500	1800	2100	2400
Depth [mm]			900		
Height [mm]			2700		
Clear width, internal workspace [mm]	950	1250	1550	1850	2150
Clear height, internal workspace [mm]			1550		
Working height [mm]			900		

Weight	1200	1500	1800	2100	2400
Without installation [kg]	Approx. 320	Approx. 390	Approx. 450	Approx. 510	Approx. 570

Bench-mounted fume cupboards with side installation
Secuflow bench-mounted fume cupboard with side installation

Design characteristics	1200	1500	1800	2100	2400
Supporting construction	Self-supporting underbench units or H-frame with push-in underbench units				
Sash	2 horizontal sashes		3 horizontal sashes		
Side panel of the fume cupboard	Glass pane on the left and/or right as an option; not if service modules are installed in the side panel of the fume cupboard Material lock on the left and/or right as an option				
Max. number of devices for scaffold points, ø 12 to 13 mm	9	12			15
Service modules	Service modules in the left and/or right side panel of the fume cupboard, depending on requirement				

Electrics	
Electrical supply	External sockets in service panels Internal sockets in service modules
Fuse box	Optional
Sash controller SC	Optional

Sanitary technology	
Sanitary supply	Service modules with take-off valves for vacuum, gases and/or waters and integrated sink (PP) as an option

Ventilation technology	1200	1500	1800	2100	2400
Minimum air exchange rate [m³/h] [1]	330	410	490	570	650
Function display	FAZ				
Airflow damper, constant	Airflow-Controller AC				
Airflow damper, variable	Airflow-Controller AC				
Detector of sash position	Only variable with Airflow-Controller AC				
Connection height [mm] for FAZ with extract manifold Ø 250 mm	2720				
Connection height [mm] for FAZ with extract manifold Ø 315 mm [2]	2830				
Connection height [mm] for AC with extract manifold Ø 250 mm	2950				
Connection height [mm] for AC with extract manifold Ø 315 mm [2]	3070				
Underbench exhaust	As an option, depending on requirements and regulations				

[1] All air volume specifications refer to an opening height of the sash window of 500 mm (test opening in acc. with EN 14175) and the maximum tracer gas values recommended by German Standard (BG Chemie). Shown rates correspond to a face velocity of 0.15 m/s. For other design face velocities, please contact your Waldner sales representative.

[2] In order to minimise noise and pressure losses, for air volumes >1000 m³/h Waldner recommends using the extract manifold with a connection diameter of 315 mm.

A maximum admission pressure of 600 Pa should not be exceeded in the case of fume cupboards with airflow dampers. The indicated minimum air exchange rates were determined under specified test conditions in acc. with EN 14175-3. These minimum air exchange rates must be adapted when dimensioning the ventilation system.
If on-site extract air monitoring systems or airflow dampers are used, the required air volumes may be different. The operating limitations must be agreed upon with Waldner.

Material/surface	
Worktop	Stoneware (not for bench-mounted fume cupboard with a width of 2400 mm) Polypropylene Epoxy Stainless steel
Internal lining	Solid grade laminate Stainless steel

Secuflow low ceiling bench-mounted fume cupboard with side installation

Intended use

- Protective device for the user, tested in acc. with EN 14175
- Extraction of fumes, aerosols and dust from the internal workspace to prevent dangerous amounts of pollutants from escaping into the laboratory
- To prevent the formation of dangerous potentially explosive atmospheres in the internal workspace
- Protection from splashes of hazardous substances
- Protection from flying particles, bodies or parts escaping from the internal workspace
- General fume cupboards constructed in acc. with EN 14175 are normally not suited for use with radioactive substances or microorganisms
- Not suitable for openly breaking down chemicals
- Active supportive flow technology (Secuflow technology) reduces the energy consumption while regulations and standards are observed
- Service outlets in the service modules of the side panels of the internal workspace
- Control units located vertically on the side service panels
- Suitable for rooms with low ceiling height

Design

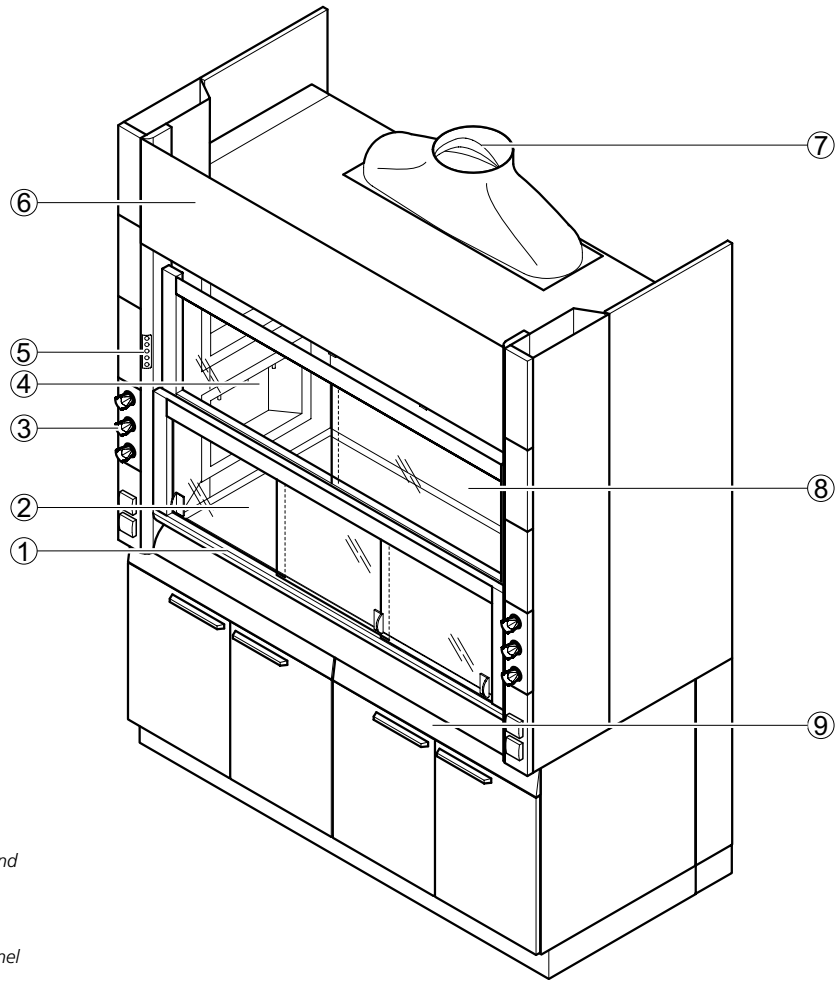

1 *Two-piece sash with handle and horizontal sashes*
2 *Worktop*
3 *Service panel*
4 *Service module in the side panel of the fume cupboard*
5 *FAZ or AC control panel*
6 *Removable fascia panel*
7 *Extract manifold*
8 *Baffle with scaffold points*
9 *Self-supporting underbench unit*

Bench-mounted fume cupboards with side installation
Secuflow low ceiling bench-mounted fume cupboard with side installation

Dimensional drawing

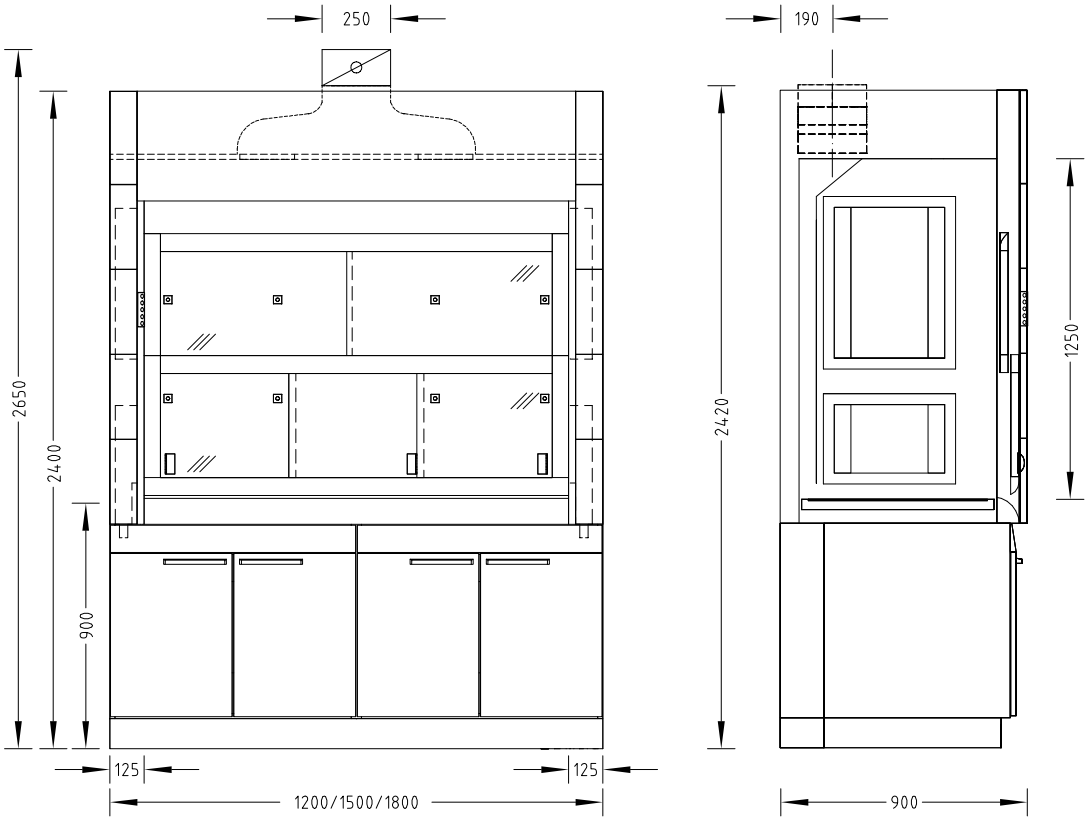

Technical data

Dimensions	1200	1500	1800
Width [mm]	1200	1500	1800
Depth [mm]		900	
Height [mm]		2400	
Clear width, internal workspace [mm]	950	1250	1550
Clear height, internal workspace [mm]		1250	
Working height [mm]		900	

Weight	1200	1500	1800
Without installation [kg]	Approx. 220	Approx. 260	Approx. 300

Bench-mounted fume cupboards with side installation
Secuflow low ceiling bench-mounted fume cupboard with side installation

Design characteristics	1200	1500	1800
Supporting construction	Self-supporting underbench units or H-frame with push-in underbench units		
Two-piece sash	2 horizontal sashes		3 horizontal sashes
Side panel of the fume cupboard	Glass pane on the left and/or right as an option; not if service modules are installed in the side panel of the fume cupboard, not with stoneware internal lining Material lock on the left and/or right as an option; not with stoneware internal lining		
Max. number of devices for scaffold points, ø 12 to 13 mm	6	9	
Service modules	Service modules in the left and/or right side panel of the fume cupboard, depending on requirement		

Electrics	
Electrical supply	External sockets in service panels Internal sockets in service modules
Fuse box	Optional
Sash controller SC	Optional

Sanitary technology	
Sanitary supply	Service modules with take-off valves for vacuum, gases and/or waters and integrated sink (PP) as an option

Ventilation technology	1200	1500	1800
Minimum air exchange rate [m³/h] [1]	330	410	490
Function display	FAZ		
Airflow damper, constant	Airflow-Controller AC		
Airflow damper, variable	Airflow-Controller AC		
Detector of sash position	Only variable with Airflow-Controller AC		
Connection height [mm] for FAZ with extract manifold Ø 250 mm	2420		
Connection height [mm] for FAZ with extract manifold Ø 315 mm [2]	2530		
Connection height [mm] for AC with extract manifold Ø 250 mm	2650		
Connection height [mm] for AC with extract manifold Ø 315 mm [2]	2770		
Underbench exhaust	As an option, depending on requirements and regulations		

[1] All air volume specifications refer to an opening height of the sash window of 500 mm (test opening in acc. with EN 14175) and the maximum tracer gas values recommended by German Standard (BG Chemie). Shown rates correspond to a face velocity of 0.15 m/s. For other design face velocities, please contact your Waldner sales representative.

[2] In order to minimise noise and pressure losses, for air volumes >1000 m³/h Waldner recommends using the extract manifold with a connection diameter of 315 mm.

A maximum admission pressure of 600 Pa should not be exceeded in the case of fume cupboards with airflow dampers.
The indicated minimum air exchange rates were determined under specified test conditions in acc. with EN 14175-3. These minimum air exchange rates must be adapted when dimensioning the ventilation system.
If on-site extract air monitoring systems or airflow dampers are used, the required air volumes may be different. The operating limitations must be agreed upon with Waldner.

Material	
Worktop	Stoneware Polypropylene Epoxy Stainless steel
Internal lining	Solid grade laminate Stainless steel

Bench-mounted fume cupboards with side installation

Bench-mounted fume cupboard with side installation for work performed while seated

Intended use

- Protective device for the user, tested in acc. with EN 14175
- Extraction of fumes, aerosols and dust from the internal workspace to prevent dangerous amounts of pollutants from escaping into the laboratory
- To prevent the formation of dangerous potentially explosive atmospheres in the internal workspace
- Protection from splashes of hazardous substances
- Protection from flying particles, bodies or parts escaping from the internal workspace
- General fume cupboards constructed in acc. with EN 14175 are normally not suited for use with radioactive substances or microorganisms
- Not suitable for openly breaking down chemicals
- Suitable for work performed while seated
- Service outlets in the service modules of the side panels of the internal workspace
- Control units located vertically on the side service panels

Design

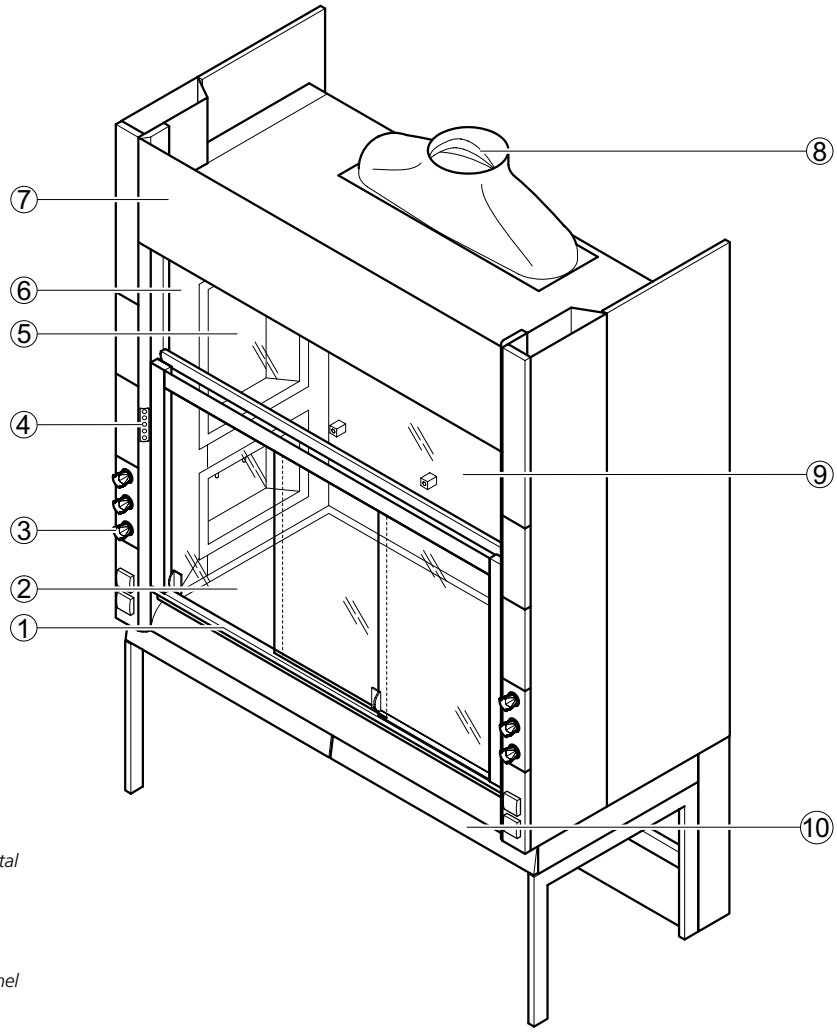

1 *Sash with handle and horizontal sashes*
2 *Worktop*
3 *Service panel*
4 *FAZ or AC control panel*
5 *Service module in the side panel of the fume cupboard*
6 *Upper sash window*
7 *Removable fascia panel*
8 *Extract manifold*
9 *Baffle with scaffold points*
10 *Support frame with push-in underbench units as an option*

Bench-mounted fume cupboards with side installation
Bench-mounted fume cupboard with side installation for work performed while seated

Dimensional drawing

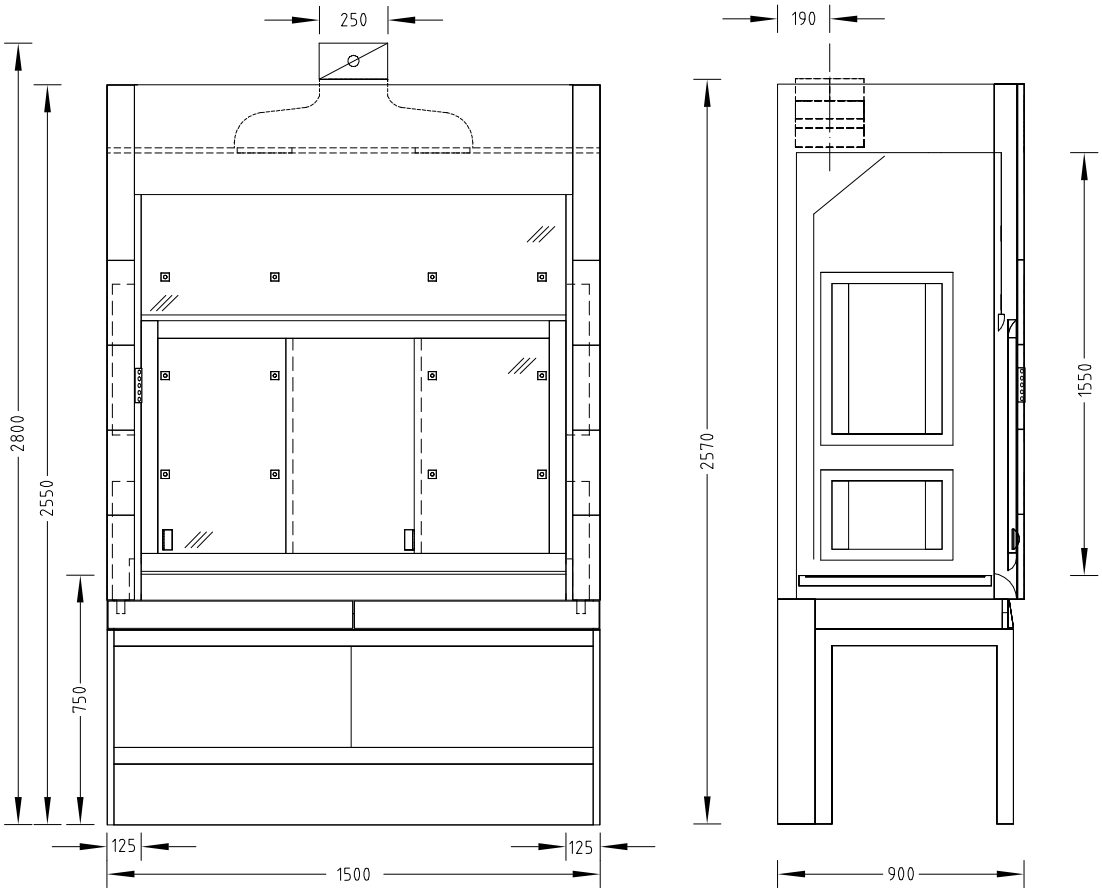

Technical data

Dimensions	
Width [mm]	1500
Depth [mm]	900
Height [mm]	2550
Clear width, internal workspace [mm]	1250
Clear height, internal workspace [mm]	1550
Working height [mm]	750

Weight	
Without installation [kg]	Approx. 390

Bench-mounted fume cupboards with side installation
Bench-mounted fume cupboard with side installation for work performed while seated

Design characteristics	
Supporting construction	H-frame
Sash	2 horizontal sashes
Side panel of the fume cupboard	Glass pane on the left and/or right as an option; not if service modules are installed in the side panel of the fume cupboard Material lock on the left and/or right as an option
Max. number of devices for scaffold points, ø 12 to 13 mm	12
Service modules	Service modules in the left and/or right side panel of the fume cupboard, depending on requirement

Electrics	
Electrical supply	External sockets in service panels Internal sockets in service modules
Fuse box	Optional
Sash controller SC	Optional

Sanitary technology	
Sanitary supply	Service modules with take-off valves for vacuum, gases and/or waters and integrated sink (PP) as an option

Ventilation technology	
Minimum air exchange rate [m³/h] [1]	530
Function display	FAZ
Airflow damper, constant	Airflow-Controller AC
Airflow damper, variable	Airflow-Controller AC
Detector of sash position	Only variable with Airflow-Controller AC
Connection height [mm] for FAZ with extract manifold Ø 250 mm	2570
Connection height [mm] for FAZ with extract manifold Ø 315 mm [2]	2730
Connection height [mm] for AC with extract manifold Ø 250 mm	2800
Connection height [mm] for AC with extract manifold Ø 315 mm [2]	2920
Underbench exhaust	As an option, depending on requirements and regulations

[1] All air volume specifications refer to an opening height of the sash window of 500 mm (test opening in acc. with EN 14175) and the maximum tracer gas values recommended by German Standard (BG Chemie). Shown rates correspond to a face velocity of 0.24 m/s. For other design face velocities, please contact your Waldner sales representative.

[2] In order to minimise noise and pressure losses, for air volumes >1000 m³/h Waldner recommends using the extract manifold with a connection diameter of 315 mm.

A maximum admission pressure of 600 Pa should not be exceeded in the case of fume cupboards with airflow dampers. The indicated minimum air exchange rates were determined under specified test conditions in acc. with EN 14175-3. These minimum air exchange rates must be adapted when dimensioning the ventilation system.
If on-site extract air monitoring systems or airflow dampers are used, the required air volumes may be different. The operating limitations must be agreed upon with Waldner.

Material	
Worktop	Stoneware Polypropylene Epoxy Stainless steel
Internal lining	Solid grade laminate

Secuflow bench-mounted fume cupboard with side installation for work performed while seated

Intended use

- Protective device for the user, tested in acc. with EN 14175
- Extraction of fumes, aerosols and dust from the internal workspace to prevent dangerous amounts of pollutants from escaping into the laboratory
- To prevent the formation of dangerous potentially explosive atmospheres in the internal workspace
- Protection from splashes of hazardous substances
- Protection from flying particles, bodies or parts escaping from the internal workspace
- General fume cupboards constructed in acc. with EN 14175 are normally not suited for use with radioactive substances or microorganisms
- Not suitable for openly breaking down chemicals
- Suitable for work performed while seated
- Active supportive flow technology (Secuflow technology) reduces the energy consumption while regulations and standards are observed
- Service outlets in the service modules of the side panels of the internal workspace
- Control units located vertically on the side service panels

Design

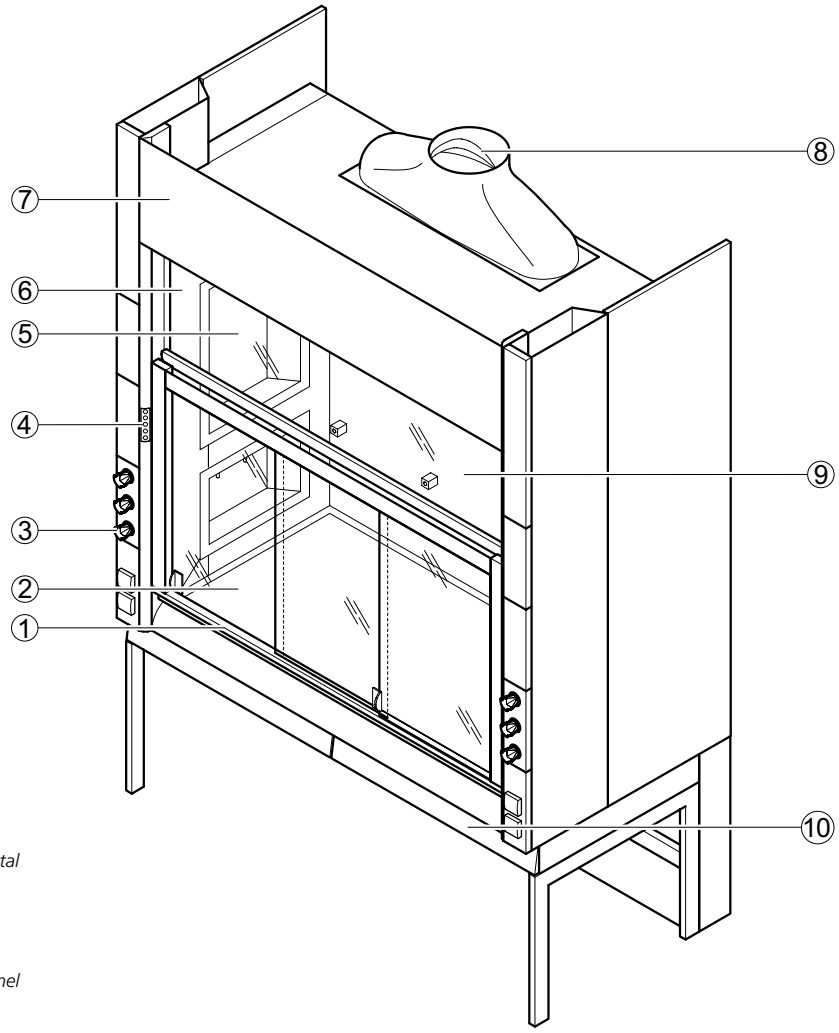

1 Sash with handle and horizontal sashes
2 Worktop
3 Service panel
4 FAZ or AC control panel
5 Service module in the side panel of the fume cupboard
6 Upper sash window
7 Removable fascia panel
8 Extract manifold
9 Baffle with scaffold points
10 Support frame with push-in underbench units as an option

Bench-mounted fume cupboards with side installation
Secuflow bench-mounted fume cupboard with side installation for work performed while seated

Dimensional drawing

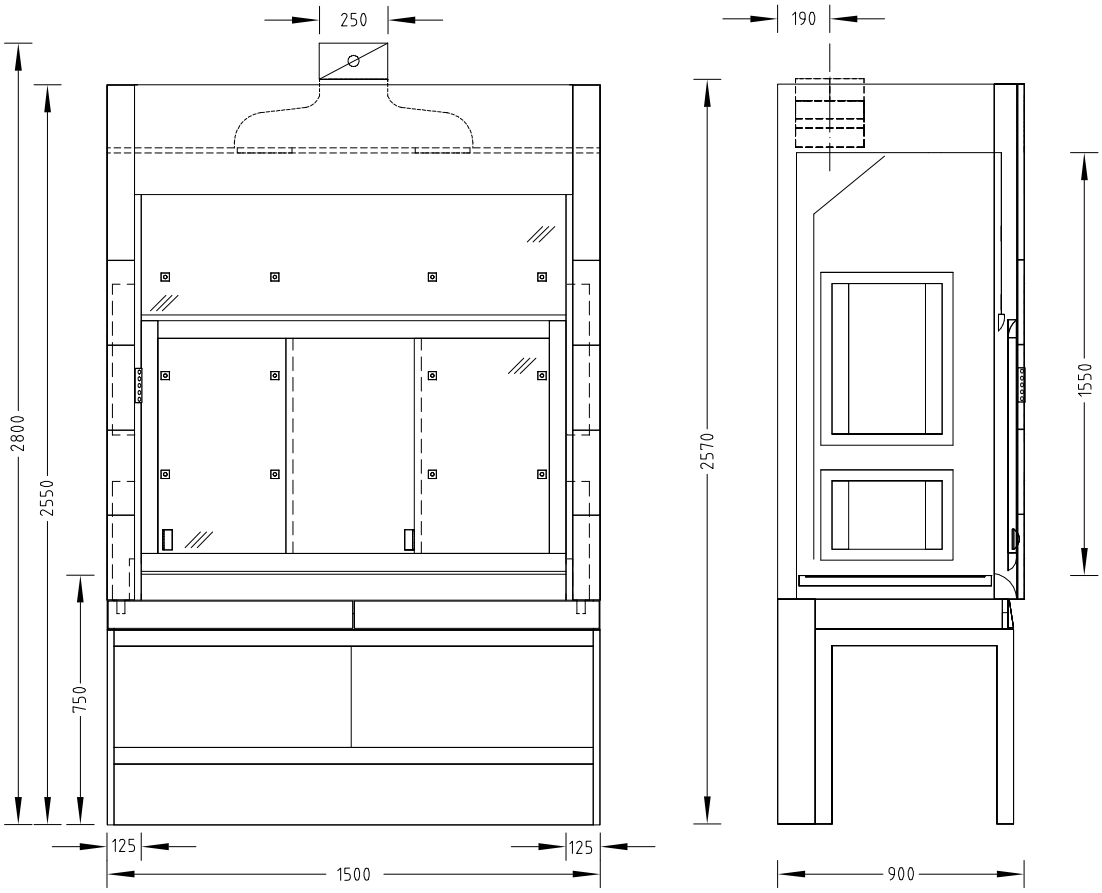

Technical data

Dimensions	
Width [mm]	1500
Depth [mm]	900
Height [mm]	2550
Clear width, internal workspace [mm]	1250
Clear height, internal workspace [mm]	1550
Working height [mm]	750

Weight	
Without installation [kg]	Approx. 390

Bench-mounted fume cupboards with side installation
Secuflow bench-mounted fume cupboard with side installation for work performed while seated

Design characteristics	
Supporting construction	H-frame
Sash	2 horizontal sashes
Side panel of the fume cupboard	Glass pane on the left and/or right as an option; not if service modules are installed in the side panel of the fume cupboard Material lock on the left and/or right as an option
Max. number of devices for scaffold points, ø 12 to 13 mm	12
Service modules	Service modules in the left and/or right side panel of the fume cupboard, depending on requirement

Electrics	
Electrical supply	External sockets in service panels Internal sockets in service modules
Fuse box	Optional
Sash controller SC	Optional

Sanitary technology	
Sanitary supply	Service modules with take-off valves for vacuum, gases and/or waters and integrated sink (PP) as an option

Ventilation technology	
Minimum air exchange rate [m³/h] [1]	410
Function display	FAZ
Airflow damper, constant	Airflow-Controller AC
Airflow damper, variable	Airflow-Controller AC
Detector of sash position	Only variable with Airflow-Controller AC
Connection height [mm] for FAZ with extract manifold Ø 250 mm	2570
Connection height [mm] for FAZ with extract manifold Ø 315 mm [2]	2730
Connection height [mm] for AC with extract manifold Ø 250 mm	2800
Connection height [mm] for AC with extract manifold Ø 315 mm [2]	2920
Underbench exhaust	As an option, depending on requirements and regulations

[1] All air volume specifications refer to an opening height of the sash window of 500 mm (test opening in acc. with EN 14175) and the maximum tracer gas values recommended by German Standard (BG Chemie). Shown rates correspond to a face velocity of 0.15 m/s. For other design face velocities, please contact your Waldner sales representative.

[2] In order to minimise noise and pressure losses, for air volumes >1000 m³/h Waldner recommends using the extract manifold with a connection diameter of 315 mm.

A maximum admission pressure of 600 Pa should not be exceeded in the case of fume cupboards with airflow dampers.
The indicated minimum air exchange rates were determined under specified test conditions in acc. with EN 14175-3. These minimum air exchange rates must be adapted when dimensioning the ventilation system.
If on-site extract air monitoring systems or airflow dampers are used, the required air volumes may be different. The operating limitations must be agreed upon with Waldner.

Material/surface	
Worktop	Stoneware Polypropylene Epoxy Stainless steel
Internal lining	Solid grade laminate

Walk-in fume cupboards
Walk-in fume cupboard with side installation

Intended use

- Protective device for the user, tested in acc. with EN 14175
- Extraction of fumes, aerosols and dust from the internal workspace to prevent dangerous amounts of pollutants from escaping into the laboratory
- To prevent the formation of dangerous potentially explosive atmospheres in the internal workspace
- Protection from splashes of hazardous substances
- Protection from flying particles, bodies or parts escaping from the internal workspace
- General fume cupboards constructed in acc. with EN 14175 are normally not suited for use with radioactive substances or microorganisms
- Not suitable for openly breaking down chemicals
- Suitable for barrier-free entering of the internal workspace
- Service outlets in the service modules of the side panels of the internal workspace
- Control units located vertically on the side service panels
- Suitable for high experimental set-ups

Design

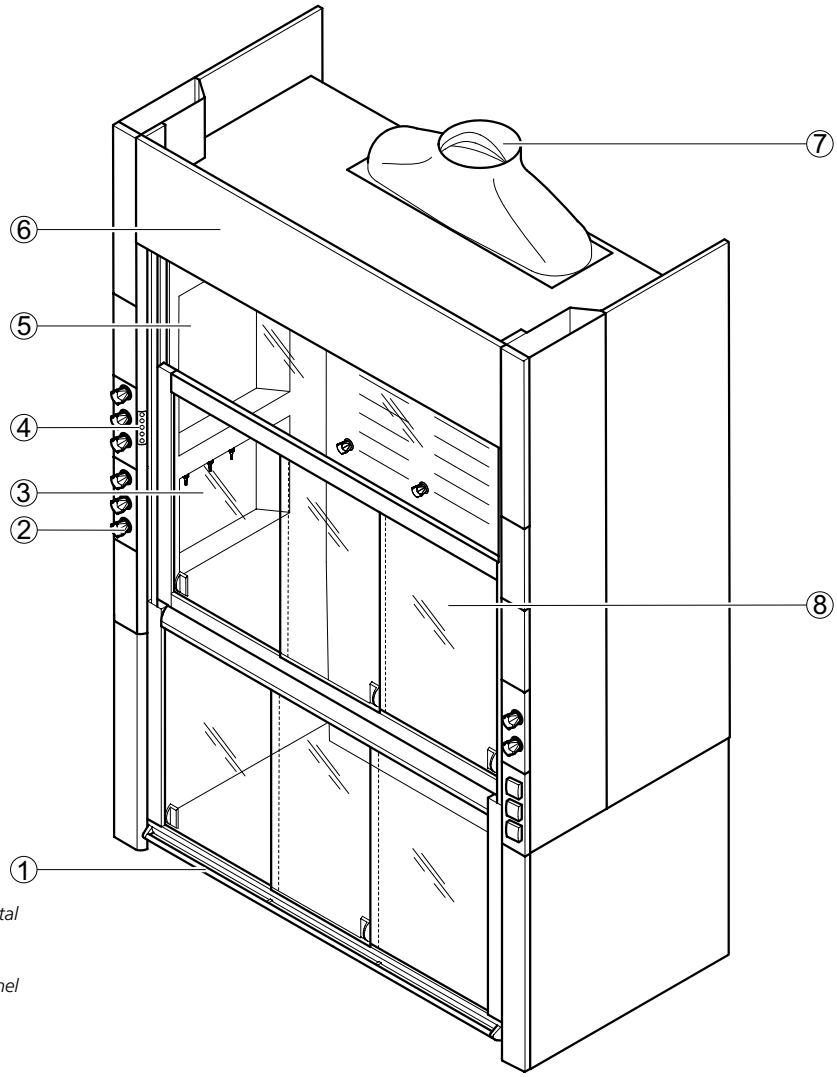

1 *Sash with handle and horizontal sashes*
2 *Service panel*
3 *Service module in the side panel of the fume cupboard*
4 *FAZ or AC control panel*
5 *Upper sash window*
6 *Removable fascia panel*
7 *Extract manifold*
8 *Baffle with scaffold points*

Dimensional drawing

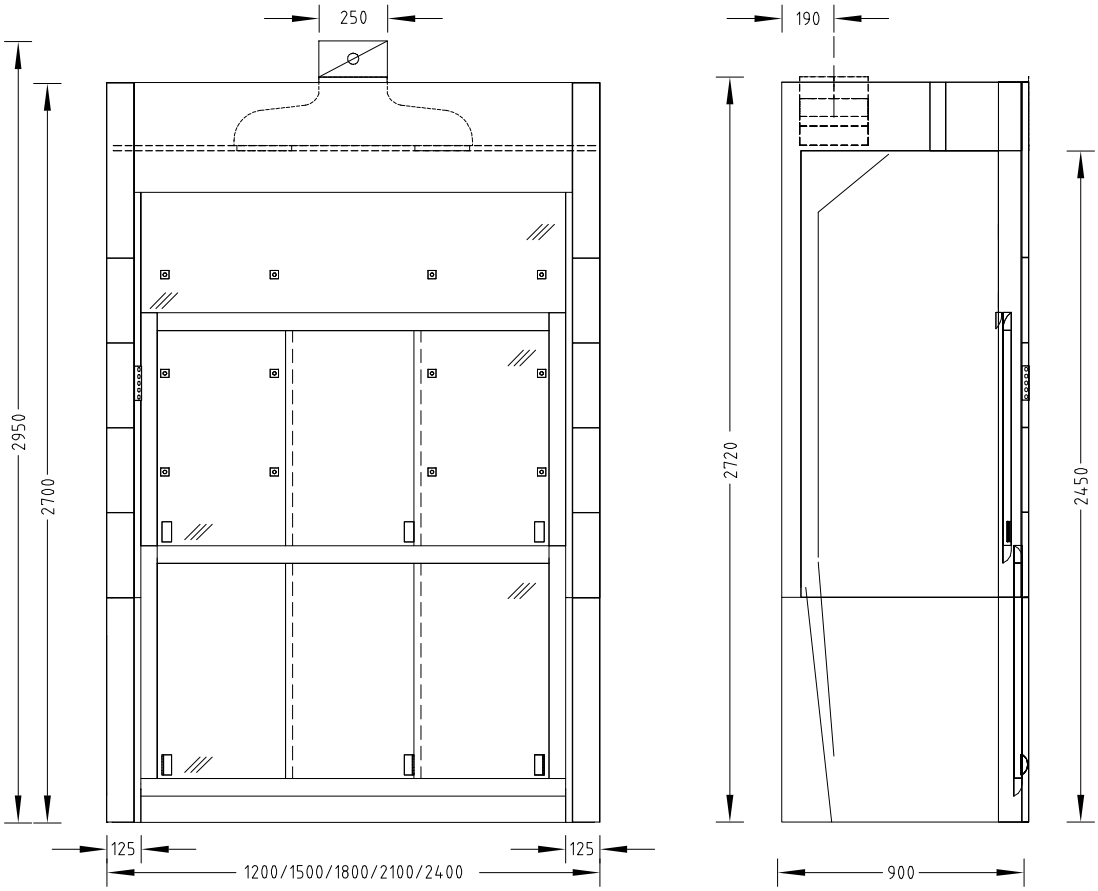

Technical data

Dimensions	1200	1500	1800	2100	2400
Width [mm]	1200	1500	1800	2100	2400
Depth [mm]			900		
Height [mm]			2700		
Clear width, internal workspace [mm]	950	1250	1550	1850	2150
Clear height, internal workspace [mm]			2450		

Weight	1200	1500	1800	2100	2400
Without installation [kg]	Approx. 320	Approx. 390	Approx. 450	Approx. 510	Approx. 570

Walk-in fume cupboards
Walk-in fume cupboard with side installation

Design characteristics	1200	1500	1800	2100	2400
Two-piece sash	2 horizontal sashes at the top and bottom		3 horizontal sashes at the top and bottom		
Side of fume cupboard	Glass pane on the left and/or right as an option; not if service modules are installed in the side panel of the fume cupboard Material lock on the left and/or right as an option				
Number of devices for scaffold points, ø 12 to 13 mm	9	12			15
Service modules	In the left and/or right side panel of the fume cupboard, depending on requirement				

Electrics	
Electrical supply	External sockets in service panels Internal sockets in service modules
Fuse box	Optional
Sash controller SC	Optional

Sanitary technology	
Sanitary supply	Service modules with take-off valves for vacuum, gases and/or waters and integrated sink (PP) as an option

Ventilation technology	1200	1500	1800	2100	2400
Minimum air exchange rate [m³/h] [1]	480	600	720	840	960
Function display	FAZ				
Airflow damper, constant	Airflow-Controller AC				
Airflow damper, variable	Airflow-Controller AC				
Detector of sash position	Only variable with Airflow-Controller AC				
Connection height [mm] for FAZ with extract manifold Ø 250 mm	2720				
Connection height [mm] for FAZ with extract manifold Ø 315 mm [2]	2830				
Connection height [mm] for AC with extract manifold Ø 250 mm	2950				
Connection height [mm] for AC with extract manifold Ø 315 mm [2]	3070				

[1] All air volume specifications refer to an opening height of the sash window of 500 mm (test opening in acc. with EN 14175) and the maximum tracer gas values recommended by German Standard (BG Chemie). Shown rates correspond to a face velocity of 0.24 m/s. For other design face velocities, please contact your Waldner sales representative.

[2] In order to minimise noise and pressure losses, for air volumes >1000 m³/h Waldner recommends using the extract manifold with a connection diameter of 315 mm.

A maximum admission pressure of 600 Pa should not be exceeded in the case of fume cupboards with airflow dampers.
The indicated minimum air exchange rates were determined under specified test conditions in acc. with EN 14175-3. These minimum air exchange rates must be adapted when dimensioning the ventilation system.
If on-site extract air monitoring systems or airflow dampers are used, the required air volumes may be different. The operating limitations must be agreed upon with Waldner.

Material	
Internal lining	Solid grade laminate

Low level fume cupboard with side installation

Intended use

- Protective device for the user, tested in acc. with EN 14175
- Extraction of fumes, aerosols and dust from the internal workspace to prevent dangerous amounts of pollutants from escaping into the laboratory
- To prevent the formation of dangerous potentially explosive atmospheres in the internal workspace
- Protection from splashes of hazardous substances
- Protection from flying particles, bodies or parts escaping from the internal workspace
- General fume cupboards constructed in acc. with EN 14175 are normally not suited for use with radioactive substances or microorganisms
- Not suitable for openly breaking down chemicals
- Suitable for experimental set-ups on an add-on table
- Service outlets in the service modules of the side panels of the internal workspace
- Control units located vertically on the side service panels

Design

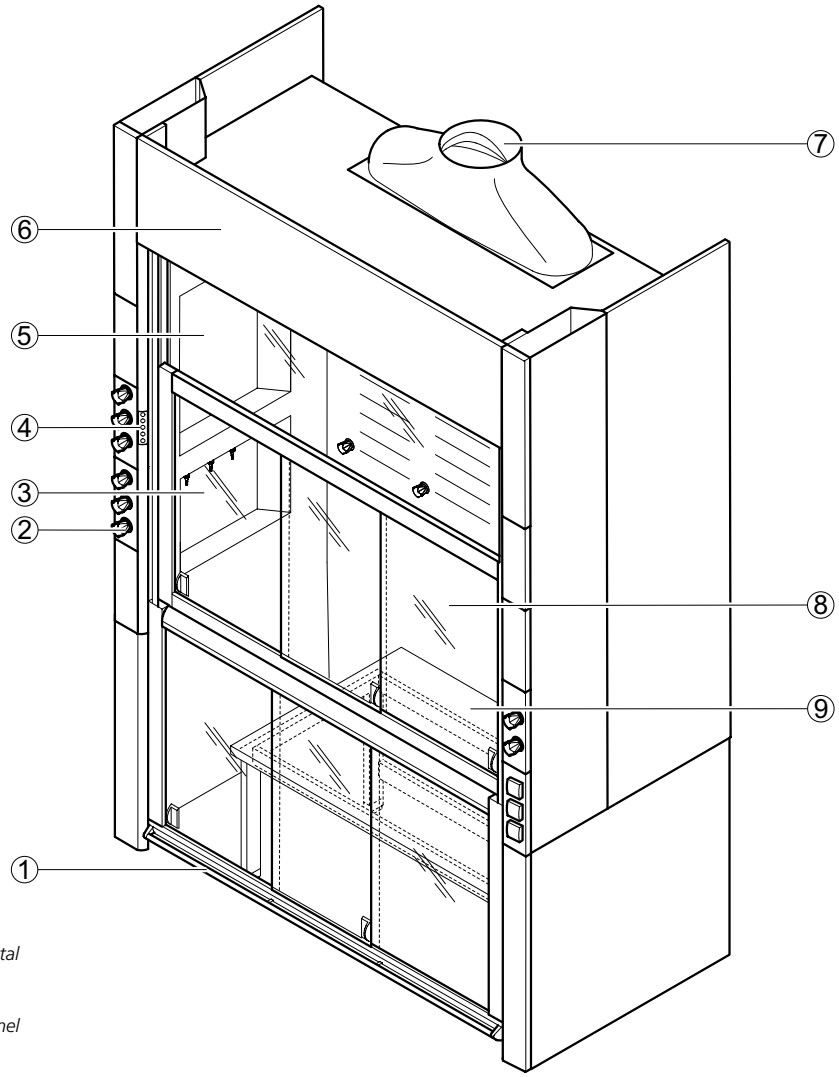

1 *Sash with handle and horizontal sashes*
2 *Service panel*
3 *Service module in the side panel of the fume cupboard*
4 *FAZ or AC control panel*
5 *Upper sash window*
6 *Removable fascia panel*
7 *Extract manifold*
8 *Baffle with scaffold points*
9 *Add-on table*

Low level fume cupboards
Low level fume cupboard with side installation

Dimensional drawing

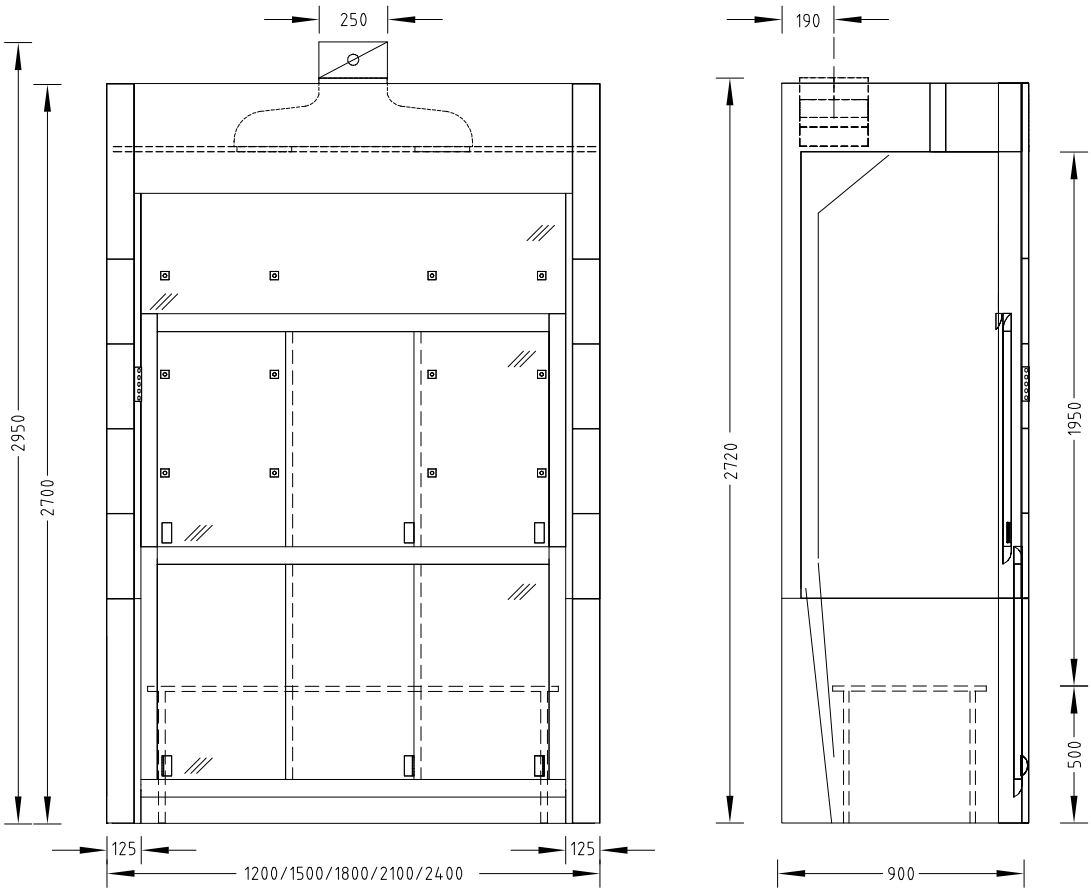

Technical data

Dimensions	1200	1500	1800	2100	2400
Width [mm]	1200	1500	1800	2100	2400
Depth [mm]	900				
Height [mm]	2700				
Clear width, internal workspace [mm]	950	1250	1550	1850	2150
Clear height, internal workspace [mm]	1950				
Add-on table with H-frame [mm]	900 x 575	1200 x 575	1500 x 575	1800 x 575	2100 x 575
Working height [mm]	500				

Weight	1200	1500	1800	2100	2400
Without installation [kg]	Approx. 320	Approx. 390	Approx. 450	Approx. 510	Approx. 570

Low level fume cupboards
Low level fume cupboard with side installation

Design characteristics	1200	1500	1800	2100	2400
Work surface	Add-on table H-frame with surrounding increased edge				
Two-piece sash	2 horizontal sashes at the top and bottom		3 horizontal sashes at the top and bottom		
Side of fume cupboard	Glass pane on the left and/or right as an option; not if service modules are installed in the side panel of the fume cupboard Material lock on the left and/or right as an option				
Number of devices for scaffold points, ø 12 to 13 mm	9	12			15
Service modules	Service modules in the left and/or right side panel of the fume cupboard, depending on requirement				

Electrics	
Electrical supply	External sockets in service panels Internal sockets in service modules
Fuse box	Optional
Sash controller SC	Optional

Sanitary technology	
Sanitary supply	Service modules with take-off valves for vacuum, gases and/or waters and integrated sink (PP) as an option

Ventilation technology	1200	1500	1800	2100	2400
Minimum air exchange rate [m³/h] [1]	480	600	720	840	960
Function display	FAZ				
Airflow damper, constant	Airflow-Controller AC				
Airflow damper, variable	Airflow-Controller AC				
Detector of sash position	Only variable with Airflow-Controller AC				
Connection height [mm] for FAZ with extract manifold Ø 250 mm	2720				
Connection height [mm] for FAZ with extract manifold Ø 315 mm [2]	2830				
Connection height [mm] for AC with extract manifold Ø 250 mm	2950				
Connection height [mm] for AC with extract manifold Ø 315 mm [2]	3070				
Underbench exhaust	As an option, depending on requirements and regulations				

[1] All air volume specifications refer to an opening height of the sash window of 500 mm (test opening in acc. with EN 14175) and the maximum tracer gas values recommended by German Standard (BG Chemie). Shown rates correspond to a face velocity of 0.24 m/s. For other design face velocities, please contact your Waldner sales representative.

[2] In order to minimise noise and pressure losses, for air volumes >1000 m³/h Waldner recommends using the extract manifold with a connection diameter of 315 mm.

A maximum admission pressure of 600 Pa should not be exceeded in the case of fume cupboards with airflow dampers.
The indicated minimum air exchange rates were determined under specified test conditions in acc. with EN 14175-3. These minimum air exchange rates must be adapted when dimensioning the ventilation system.
If on-site extract air monitoring systems or airflow dampers are used, the required air volumes may be different. The operating limitations must be agreed upon with Waldner.

Material	
Worktop H-frame with surrounding increased edge	Polypropylene Epoxy Stoneware Stainless steel
Internal lining	Solid grade laminate

Special fume cupboards
Special application fume cupboard

Intended use

- Protective device for the user, tested in acc. with DIN 12924-2
- Suitable for open, thermal processes of breaking down chemicals with aggressive media such as e. g. sulphuric acid, perchloric acid, hydrofluoric acid or aqua regia
- The construction of the fume cupboard and the materials of the inner lining of the internal workspace determine which aggressive media the device can be used for
- Extraction of fumes, aerosols and dust from the internal workspace to prevent dangerous amounts of pollutants from escaping into the laboratory
- To prevent the formation of dangerous potentially explosive atmospheres in the internal workspace
- Protection from splashes of hazardous substances in the internal workspace
- Protection from flying particles, bodies or parts escaping from the internal workspace
- Fume cupboards constructed in acc. with DIN 12924-2, are normally not permitted for use with radioactive substances or microorganisms

Design

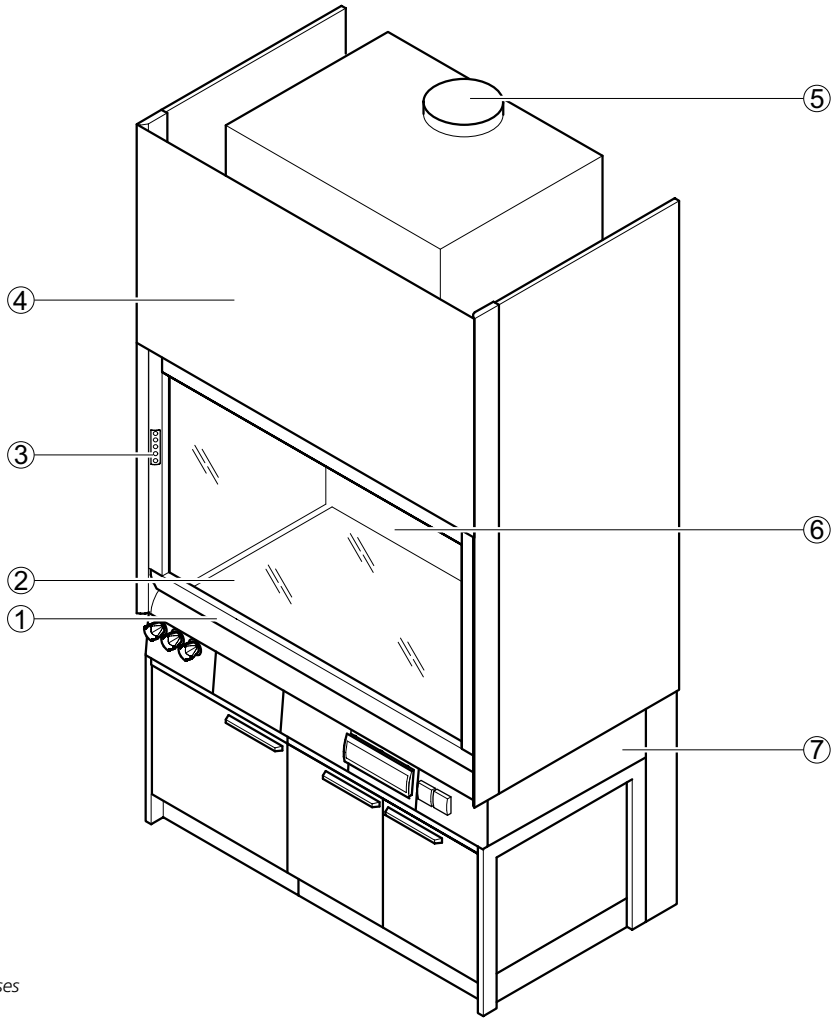

1 *Sash with handle*
2 *Worktop*
3 *FAZ or AC control panel*
4 *Removable fascia panel*
5 *Extract air spigot integrated in fume-scrubber for harmful gases*
6 *Baffle*
7 *H-frame with push-in under-bench unit with support and service panels*

Dimensional drawing

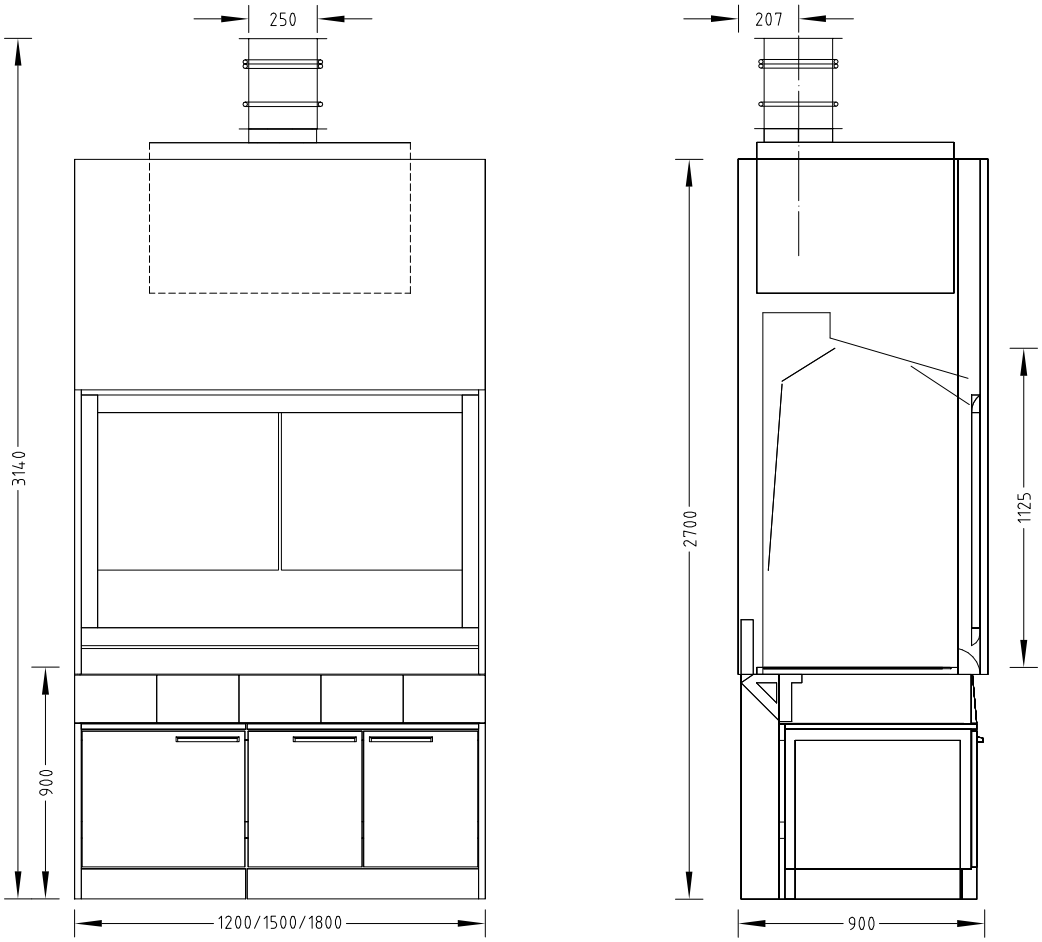

Technical data

Dimensions	1200	1500	1800
Width [mm]	1200	1500	1800
Depth [mm]		900	
Height [mm]		2700	
Clear width, internal workspace [mm]	1150	1450	1750
Clear height, internal workspace [mm]		1125	
Working height [mm]		900	

Weight	1200	1500	1800
Without installations and fume-scrubber [kg]	Approx. 250	Approx. 300	Approx. 350
Fume-scrubber without filling [kg]	90 (type C 54)		100 (type C 90)

Special fume cupboards
Special application fume cupboard

Design characteristics	
Supporting construction	H-frame with push-in underbench units
Fume-scrubber	Optional
Extract manifold with condensate drain	Optional
Extract manifold with sprinkler	Optional
Neutralisation unit underbench unit	Optional

Electrics	
Electrical supply	External sockets in service panels
Fuse box	Optional
Sash controller SC	Optional

Sanitary technology	
Sanitary supply	With take-off valves for vacuum, gases and/or waters and drip cup integrated in the worktop as an option

Ventilation technology	1200	1500	1800
Minimum air exchange rate [m³/h] [1]	600	750	900
Pressure loss, extract manifold with condensate drain [Pa]	45/120	50/120	85/150
Pressure loss, extract manifold with FAZ/AC [Pa]	FAZ 250/AC 300	FAZ 300/AC 350	FAZ 440/AC 500
Pressure loss, fume cupboard with fume-scrubber [Pa]	410/460	460/510	850/900
Fume-scrubber Friatec	C 54		C 90
Function display	FAZ		
Airflow damper, constant	Airflow-Controller AC		
Connection height [mm] for FAZ and AC with extract manifold Ø 250 mm	3140		
Underbench exhaust	As an option, depending on requirements and regulations		

[1] All air volume specifications refer to an opening height of the sash window of 500 mm (test opening in acc. with EN 14175) and the maximum tracer gas values recommended by German Standard (BG Chemie).

A maximum admission pressure of 600 Pa should not be exceeded in the case of fume cupboards with airflow dampers.

The indicated minimum air exchange rates were determined under specified test conditions in acc. with EN 14175-3. These minimum air exchange rates must be adapted when dimensioning the ventilation system.
If on-site extract air monitoring systems or airflow dampers are used, the required air volumes may be different. The operating limitations must be agreed upon with Waldner.

Material/surface	
Internal lining including worktop	Stoneware (when sulphuric acid, aqua regia, perchloric acid are used) Polypropylene (when hydrofluoric acid is used)

Radio-isotope fume cupboard

Intended use

- Protective device for the user, tested in acc. with DIN 25466
- Extraction during work with radioactive substances if increased requirements for radiation protection apply
- Protection from incorporation, contamination and external radiation exposure
- Extraction of fumes, aerosols and dust from the internal workspace to prevent dangerous amounts of pollutants from escaping into the laboratory
- To prevent the formation of dangerous potentially explosive atmospheres in the internal workspace
- Protection from splashes of hazardous substances in the internal workspace
- Protection from flying particles, bodies or parts escaping from the internal workspace
- Fume cupboards constructed in acc. with DIN 25466 are normally not permitted for use with microorganisms
- Not suitable for openly breaking down chemicals

Design

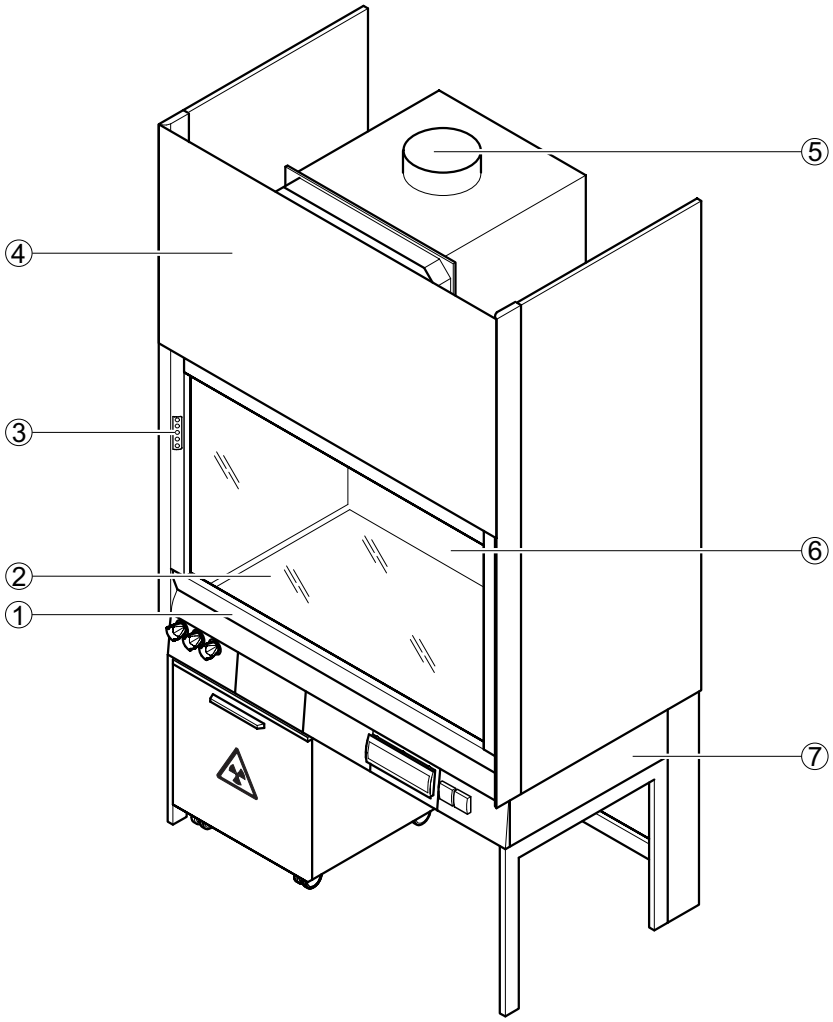

1 *Sash with handle*
2 *Worktop*
3 *FAZ or AC control panel*
4 *Removable fascia panel*
5 *Extract air spigot integrated in filter housing*
6 *Baffle with scaffold points*
7 *H-frame with push-in under-bench unit with support and service panels*

Special fume cupboards
Radio-isotope fume cupboard

Dimensional drawing

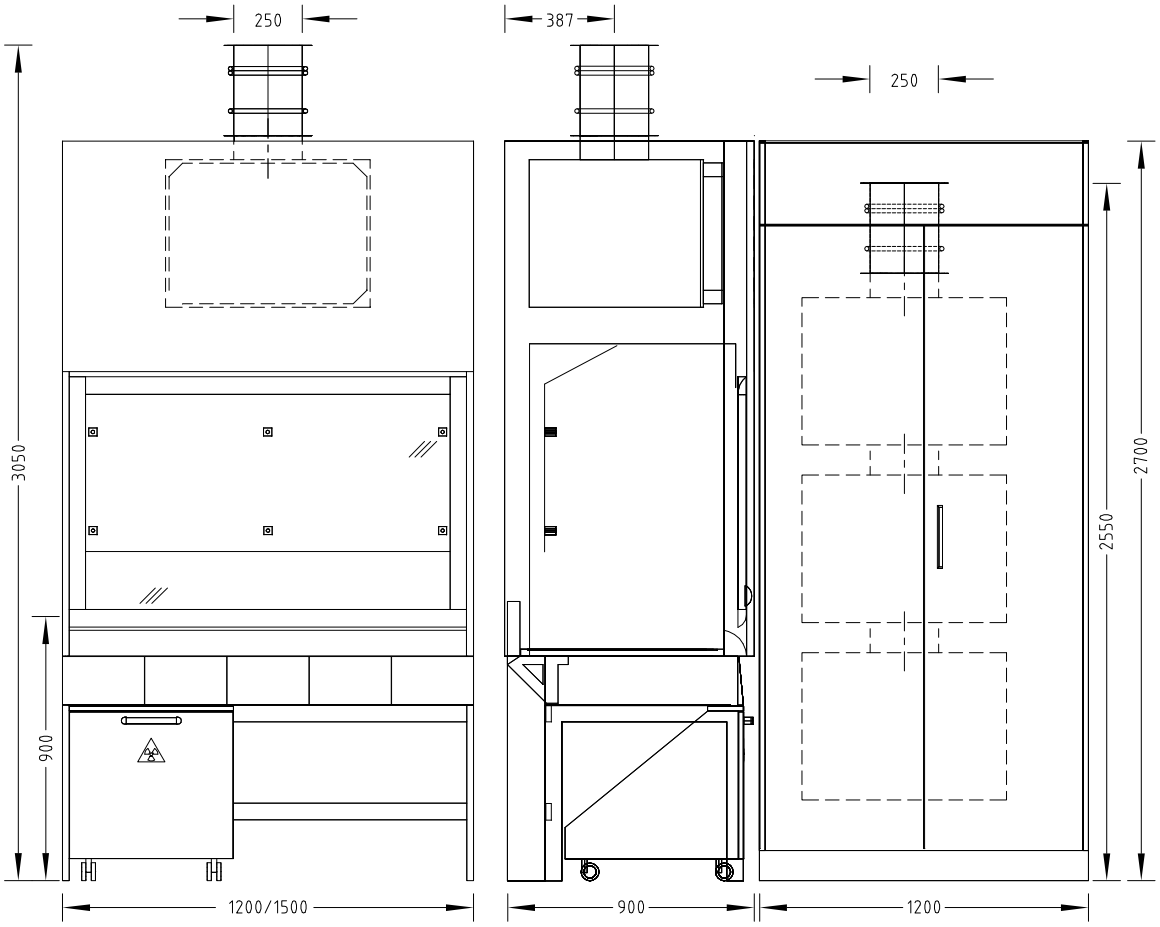

Technical data

Dimensions	1200	1500
Width [mm]	1200	1500
Depth [mm]	900	
Height [mm]	2700	
Clear width, internal workspace [mm]	1150	1450
Clear height, internal workspace [mm]	1053	
Working height [mm]	900	
Filter housing, width x depth x height [mm]	820 x 775 x 674	

Weight	1200	1500
Without installations and lead insert [kg]	Approx. 250	Approx. 300
Filter housing [kg]	90	

Special fume cupboards
Radio-isotope fume cupboard

Design characteristics	
Supporting construction	Self-supporting underbench units or H-frame with push-in underbench units
Sash	One-piece
Number of devices for scaffold points, ø 12 to 13 mm	6
Filter, fume cupboard roof	Filter and particle filter Filter and active charcoal filter
Filter, lateral top-mounted cabinet (max. 3 filter housings)	Filter and particle filter Active charcoal filter Particulate filter
Differential pressure gauges	Display of the degree of saturation of the filters as an option (not for active charcoal filter)
Lead insert	Optional
Waste disposal system for radio-isotope residual material in the underbench unit	Canister for liquid radio-isotope residual material as an option Collapsible boxes for solid radio-isotope residual material as an option Level indicator and/or opening in the worktop as an option

Electrics	
Electrical supply	External sockets in service panels
Fuse box	Optional
Sash controller SC	Optional

Sanitary technology	
Sanitary supply	With take-off valves for vacuum and gases as an option

Ventilation technology	1200	1500
Minimum air exchange rate [m³/h] [1]	480	600
Pressure loss, filter [Pa] [2]	25/200	30/235
Pressure loss, particle filter [Pa] [2]	50/300	60/350
Pressure loss, active charcoal filter [Pa] [2]	25/25	30/30
Pressure loss, particulate filter [Pa] [2]	30/250	35/290
Function display	FAZ	
Airflow damper, constant	Airflow-Controller AC	
Airflow damper, variable	Airflow-Controller AC	
Connection height [mm] for FAZ and AC with extract manifold Ø 250 mm	3050	
Underbench exhaust	As an option, depending on requirements and regulations	

[1] All air volume specifications refer to an opening height of the sash window of 500 mm (test opening in acc. with EN 14175) and the maximum tracer gas values recommended by German Standard (BG Chemie).

[2] Pressure loss values refer to the states clean/contaminated.

A maximum admission pressure of 600 Pa should not be exceeded in the case of fume cupboards with airflow dampers.
The indicated minimum air exchange rates were determined under specified test conditions in acc. with EN 14175-3. These minimum air exchange rates must be adapted when dimensioning the ventilation system.
If on-site extract air monitoring systems or airflow dampers are used, the required air volumes may be different. The operating limitations must be agreed upon with Waldner.
In the case of fume cupboards with filters, the pressure loss of the integrated filter stages must be added to the pressure loss of the fume cupboard.

Material/surface	
Internal lining including worktop	Polypropylene Stainless steel

Special fume cupboards
Filter fume cupboard

Intended use

- Before the extract air from the internal workspace is released into the environment, it is cleaned by a filter unit

Design

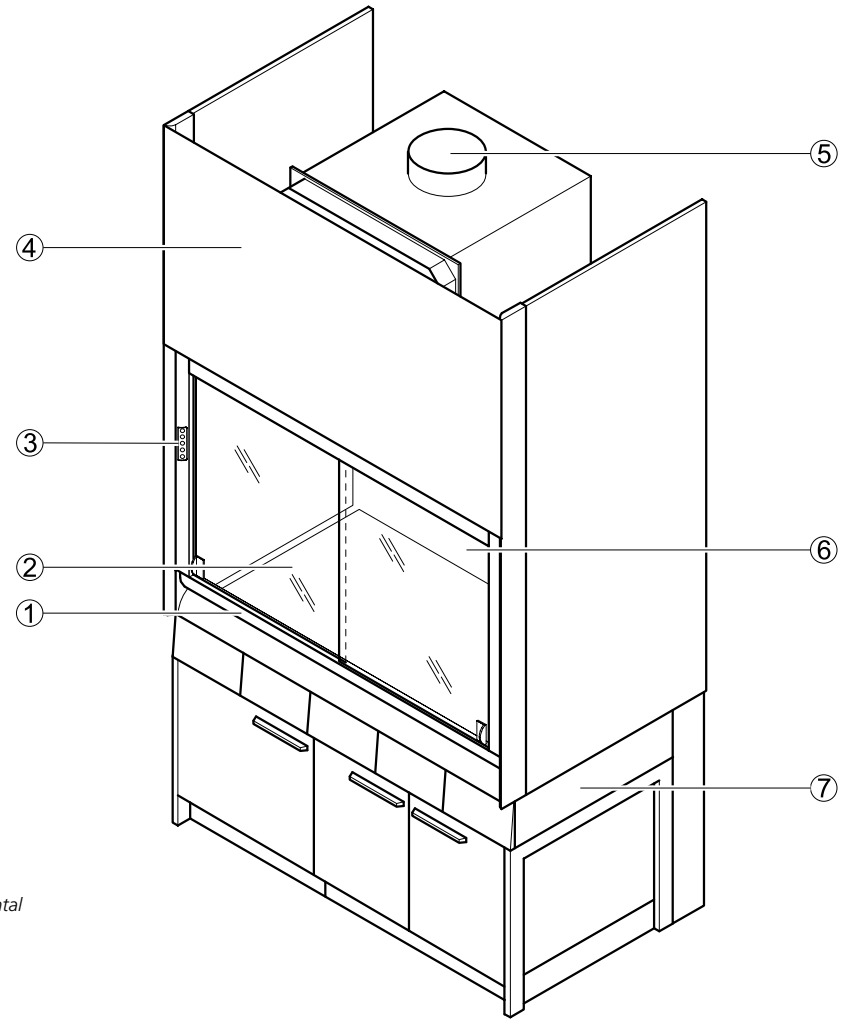

1 *Sash with handle and horizontal sashes*
2 *Worktop*
3 *FAZ or AC control panel*
4 *Removable fascia panel*
5 *Extract manifold*
6 *Baffle with scaffold points*
7 *H-frame with push-in under-bench unit with support and service panels*

Dimensional drawing

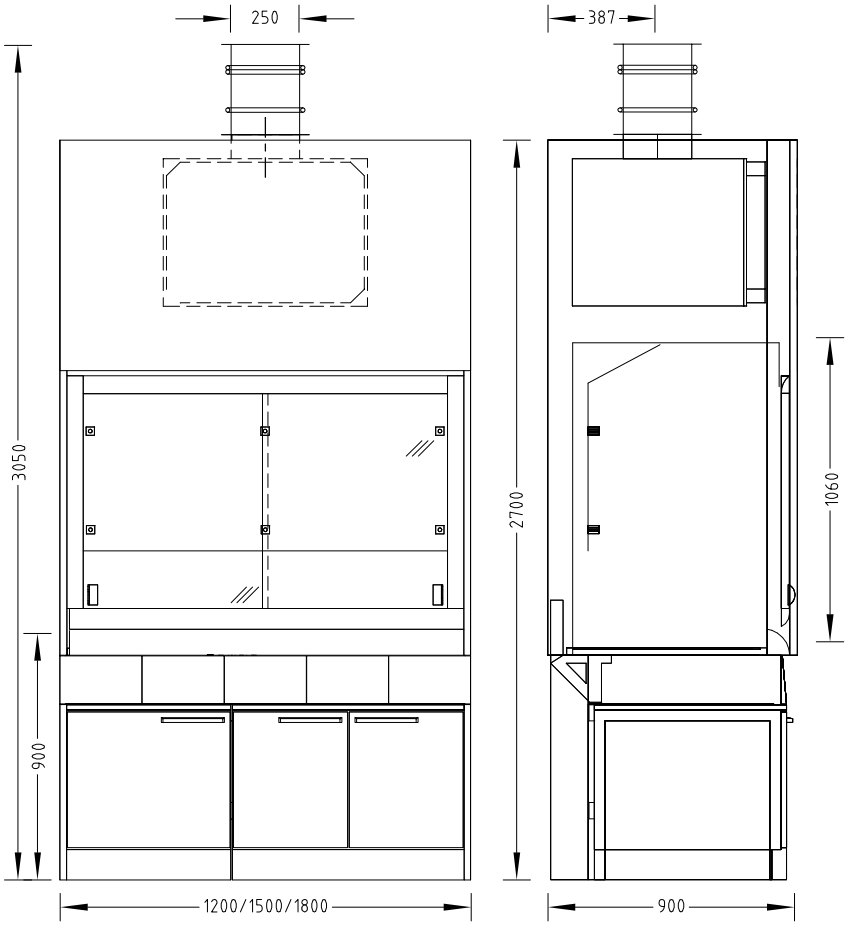

Technical data

Dimensions	1200	1500	1800
Width [mm]	1200	1500	1800
Depth [mm]		900	
Height [mm]		2700	
Clear width, internal workspace [mm]	1150	1450	1750
Clear height, internal workspace [mm]		1060	
Working height [mm]		900	
Filter housing, width x depth x height [mm]		820 x 775 x 674	

Weight	1200	1500	1800
Filter fume cupboard without installations [kg]	Approx. 270	Approx. 320	Approx. 370
Filter housing [kg]		90	

Special fume cupboards
Filter fume cupboard

Design characteristics	1200	1500	1800
Supporting construction	H-frame with push-in underbench units		
Sash	2 horizontal sashes		3 horizontal sashes
Glass pane in the side wall	Possible on the left and/or right side of the fume cupboard; not with stoneware internal lining		
Number of devices for scaffold points, ø 12 to 13 mm	6		8
Material lock	Possible on the left and/or right side of the fume cupboard		
Filter, fume cupboard roof	Specifications on request		
Differential pressure gauges	Display of the degree of saturation of the filters as an option (not for active charcoal filter)		

Electrics	
Electrical supply	External sockets in service panels
Fuse box	Optional
Sash controller SC	Optional

Sanitary technology	
Sanitary supply	With take-off valves for vacuum, gases and/or waters and drip cup integrated in the worktop as an option

Ventilation technology	1200	1500	1800
Minimum air exchange rate [m³/h] [1]	480	600	720
Pressure loss, filter [Pa] [2]	35/200	45/235	65/290
Pressure loss, particle filter [Pa] [2]	70/300	95/365	130/430
Pressure loss, active charcoal filter [Pa] [2]	35/25	45/30	65/35
Function display	FAZ		
Airflow damper, constant	Airflow-Controller AC		
Airflow damper, variable	Airflow-Controller AC		
Detector of sash position	Only variable with Airflow-Controller AC		
Connection height [mm] for FAZ and AC with extract manifold Ø 250 mm	3050		
Underbench exhaust	As an option, depending on requirements and regulations		

[1] All air volume specifications refer to an opening height of the sash window of 500 mm (test opening in acc. with EN 14175) and the maximum tracer gas values recommended by German Standard (BG Chemie).

[2] Pressure loss values refer to the states clean/contaminated.

A maximum admission pressure of 600 Pa should not be exceeded in the case of fume cupboards with airflow dampers.
The indicated minimum air exchange rates were determined under specified test conditions in acc. with EN 14175-3. These minimum air exchange rates must be adapted when dimensioning the ventilation system.
If on-site extract air monitoring systems or airflow dampers are used, the required air volumes may be different. The operating limitations must be agreed upon with Waldner.
In the case of fume cupboards with filters, the pressure loss of the integrated filter stages must be added to the pressure loss of the fume cupboard.

Material/surface	
Worktop	Stoneware Polypropylene Epoxy Stainless steel
Internal lining	Melamine resin facing Solid grade laminate

Intended use

- Can be used where required, with connections for the services supply, e. g. service wings
- Unrestricted view into the cupboard from all sides
- Service outlets in the internal workspace
- Control units located horizontally on the service rail of the support unit

Design

Front view

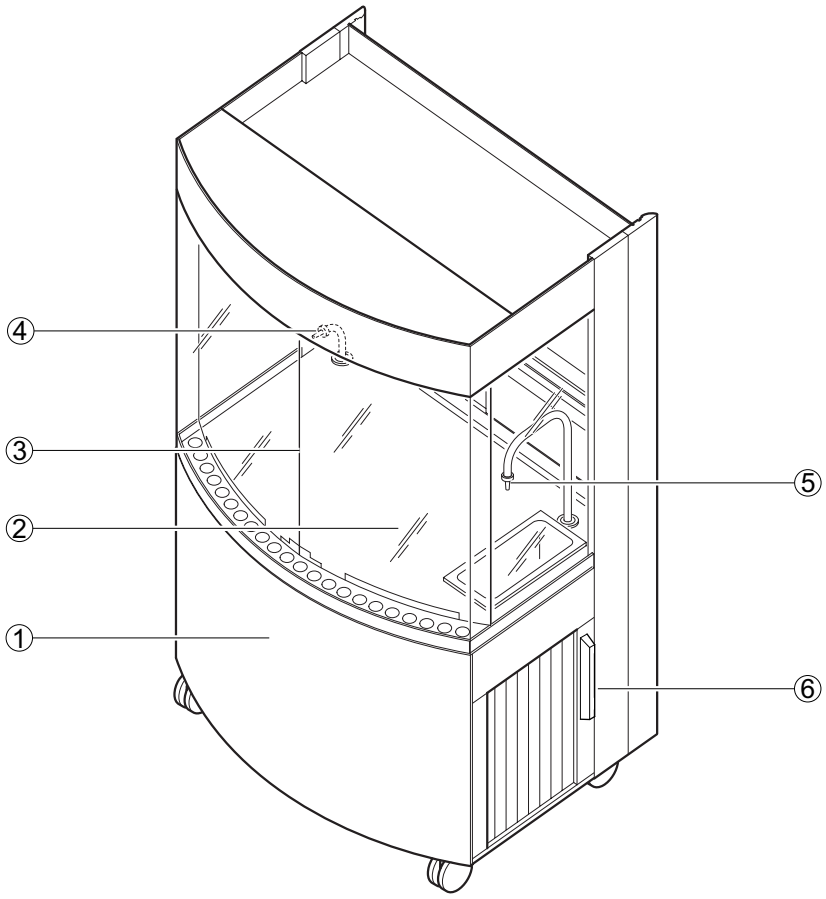

1 *Trolley*
2 *Worktop with surrounding increased edge*
3 *Viewing window and baffle (safety glass)*
4 *Gas outlet*
5 *Water outlet with sink and waste water lifting unit*
6 *Openings for pipes and cables*

Mobile fume cupboards AeroEm

Rear view

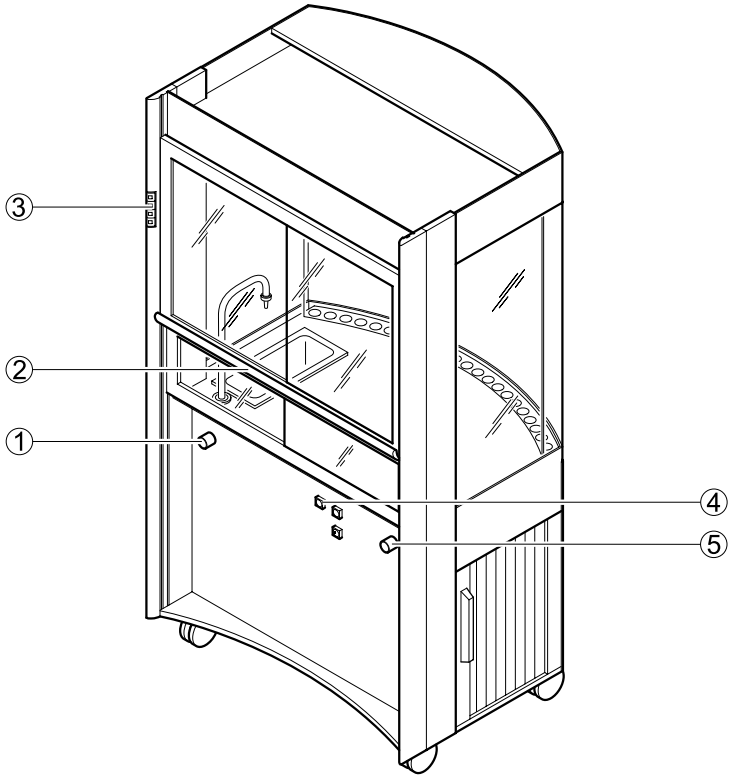

1 *Valve for water outlet*
2 *Handle with sash and horizontal sash*
3 *FAZ control panel*
4 *Switch for internal sockets*
5 *Valve for gas outlet*

Technical data

Dimensions	
Width [mm]	1050
Depth [mm]	815
Height [mm]	1975
Working height [mm]	900
Height, castors [mm]	120

Weight	
Weight [kg]	180

Design characteristics	
Sash	Two-piece, moves up and down with 2 horizontal sashes each
Glass pane in the side wall	All 4 sides of the fume cupboard
Lighting	Dazzle-free, can be switched from the outside
Roller shutter guiding	For pipes and cables on the left and right side of the fume cupboard

Electrics	
Electrical supply	2 sockets in the internal workspace, can be switched individually from the outside
Total power of sockets [W]	1000
Connection voltage [V AC]	230
Voltage of waste water lifting unit [V]	230
Power of lighting [W]	55
Length, electrical connection cable [mm]	2500

Sanitary technology	
Water connection	Optional
Waste water connection	Waste water quick release outlet as an option
Gas connection	Optional
Water fitting (tap)	Cold water WPC or WNC (EN) as an option, with drip cup, can be operated from the outside
Gas outlet	Optional

Ventilation technology	
Minimum air exchange rate [m³/h] [1)]	300
Air-supply assistance fan	Can be switched on the FAZ
Function display	FAZ
2 extract air spigots Ø [mm]	90
Length of extract air duct [mm]	2500

[1)] All air volume specifications refer to an opening height of the sash window of 500 mm (test opening in acc. with EN 14175) and the maximum tracer gas values recommended by German Standard (BG Chemie).

The indicated minimum air exchange rates were determined under specified test conditions in acc. with EN 14175-3.
These minimum air exchange rates must be adapted when dimensioning the ventilation system.
If on-site extract air monitoring systems or airflow dampers are used, the required air volumes may be different. The operating limitations must be agreed upon with Waldner.

Material/surface	
Worktop	Stoneware-composite worktop with raised Polypropylene edge

Mobile fume cupboards
MobilAir

Intended use

- Can be used where required (only in air-circulating mode)
- Control units located externally

Design

Air-circulating mode

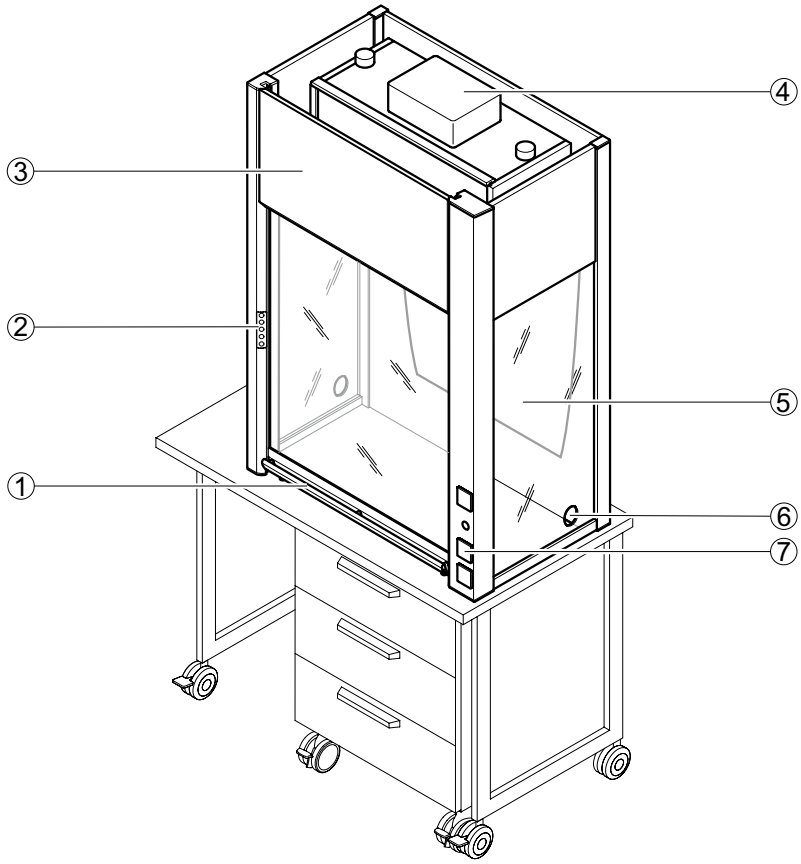

1 *Sash with handle*
2 *FAZ control panel*
3 *Removable fascia panel*
4 *Filter housing with ventilator in air-circulating mode*
5 *Rear panel with air guiding profile*
6 *Material lock*
7 *Sockets*

Extract air operation

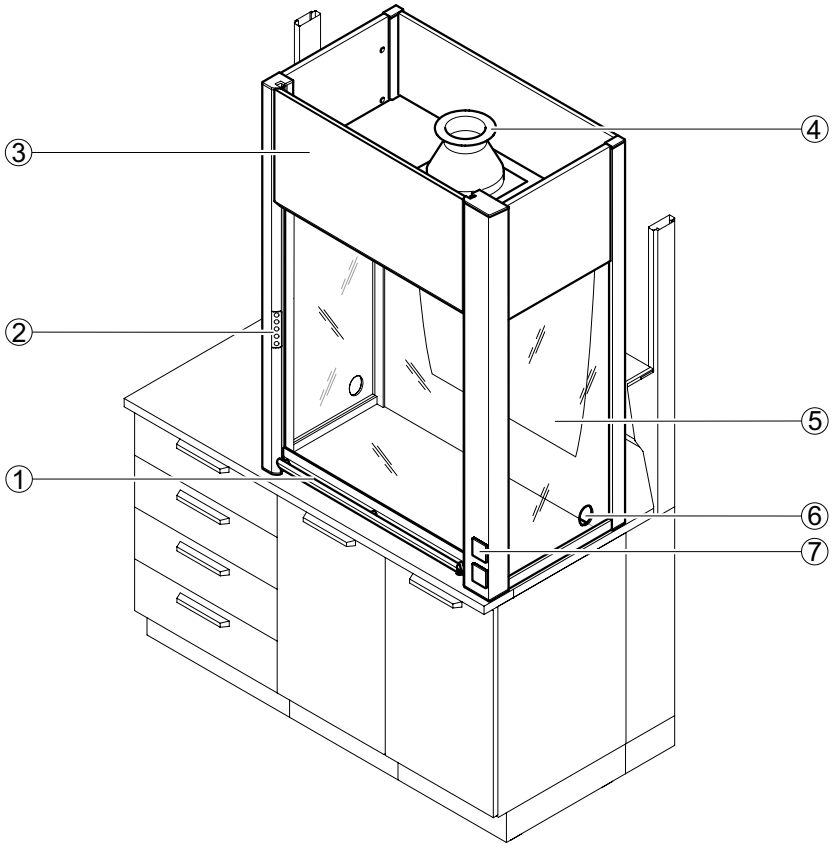

1 *Sash with handle*
2 *FAZ control panel*
3 *Removable fascia panel*
4 *Extract air spigot to on-site extract air system*
5 *Rear panel with air guiding profile*
6 *Material lock*
7 *Sockets*

Technical data

Dimensions	
Width [mm]	900
Depth [mm]	600
Height with sash closed/open [mm]	1215/1620
Access width [mm]	730
Clear width, internal workspace [mm]	850
Effective depth [mm]	503
Clear internal height up to lamp [mm]	846
Clear internal height up to ceiling [mm]	935

Weight	
MobilAir for extract air operation [kg]	Approx. 70
MobilAir for air-circulating mode incl. filter [kg]	Approx. 82

Mobile fume cupboards MobilAir

Design characteristics	
Air-circulating mode	With ventilator and filter
Extract air operation	Extract air spigot connected to on-site extract air system
Lighting	Dazzle-free, can be switched from the outside
Sash	Moves vertically
Material lock	Possible on the left and/or right side of the fume cupboard

Electrics	
Electrical supply	2 external sockets
Total power of sockets [W]	1000
Connection voltage [V AC]	230
Lighting [W]	13
Ventilator power [W]	115

Ventilation technology	
Minimum air exchange rate [m³/h]	300
Function display	FAZ as an option
Connection height upper edge of duct [mm] Extract air spigot Ø 125 mm	1137
Air-circulating mode	Filter as an option Ventilator, speed governor for switching on/off as an option

Material	
Side panel design, sash	Plexiglas

Intended use

- Extraction of thermal loads, gases, fumes, aerosols or dust escaping from the internal workspace of the housing
- Reduced sound emission
- Not suitable for openly breaking down chemicals
- Not suitable as a replacement for bench-mounted fume cupboards in acc. with EN 14175

Design

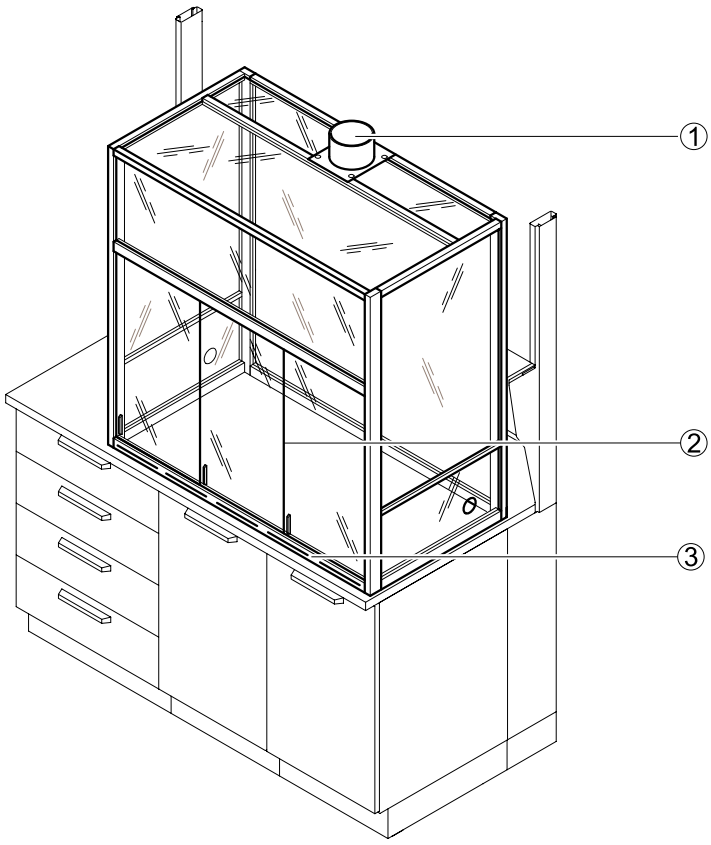

1 Extract air spigot
2 Horizontal sash
3 Ventilation slots

Technical data

Dimensions	1200	1500	1800	2100
Width [mm]	1200	1500	1800	2100
Depth [mm]	565 715 750 900			
Height [mm]	1450			
Height incl. extract air spigot [mm]	1550			
Height incl. extract manifold [mm]	1750			

Housings
Permanent enclosure

Design characteristics	1200	1500	1800	2100
Construction	Shorter rear panel for using the services if combined with service spines			
Sash	2 horizontal sashes	3 horizontal sashes		
Extract air operation	Connected to on-site extract air system Extract manifold as an option			
Material lock	Optional			
Lighting	Optional			
Shelf board, inside	Optional			

Ventilation technology	
Function display	FAZ as an option
Connection height [mm] for extract air spigot Ø 125 mm	1550
Connection height [mm] for extract manifold Ø 250 mm	1750

Material	
Side panel design, sash	Safety glass

Intended use

- For the extraction of safety cabinets (underbench units) used for the storage of hazardous materials
- For the extraction of underbench units in service spines and fume cupboards

Design

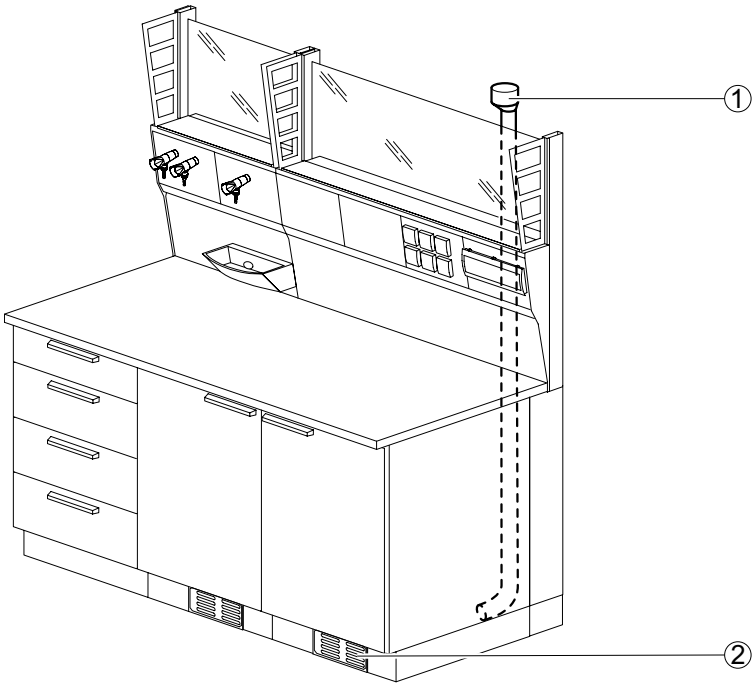

1 Ventilation connection
2 Ventilation slots

Technical data

Ventilation technology	
Air exchange rate [m³/h]	40
Ventilation connection (ascending duct) Ø [mm]	90

Material	
Ventilating pipe	PPS

Local extraction devices
AAS extract system

Intended use

- For the extraction of combustion residues in laboratories
- For the extraction of cold and hot flames
- To stabilise the burner flame
- To protect the instruments from corrosive fumes

Design

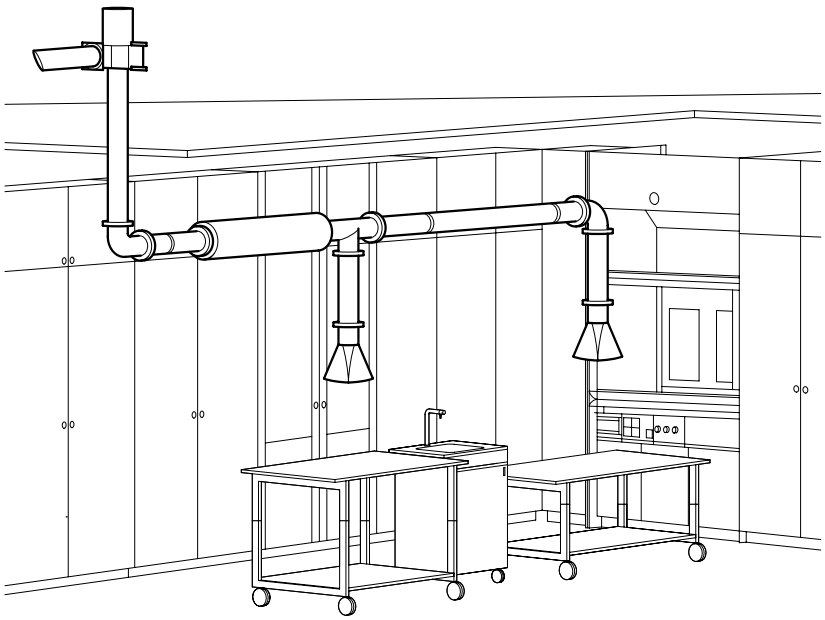

Technical data

Dimensions	
Dimensioning	Project-planning as required

Design characteristics	
Standard	AAS extractor hood Telescopic tube Pipe systems Ventilators Blow-out unit Fastening elements
Acoustic insulation	Installation of the ventilators and blow-out unit outside the laboratory as an option

Material	
Pipe systems	Stainless steel
AAS extractor hood	Stainless steel

Intended use

- For the extraction of a specific area
- For fixing to service wings, service spines or the wall

Design

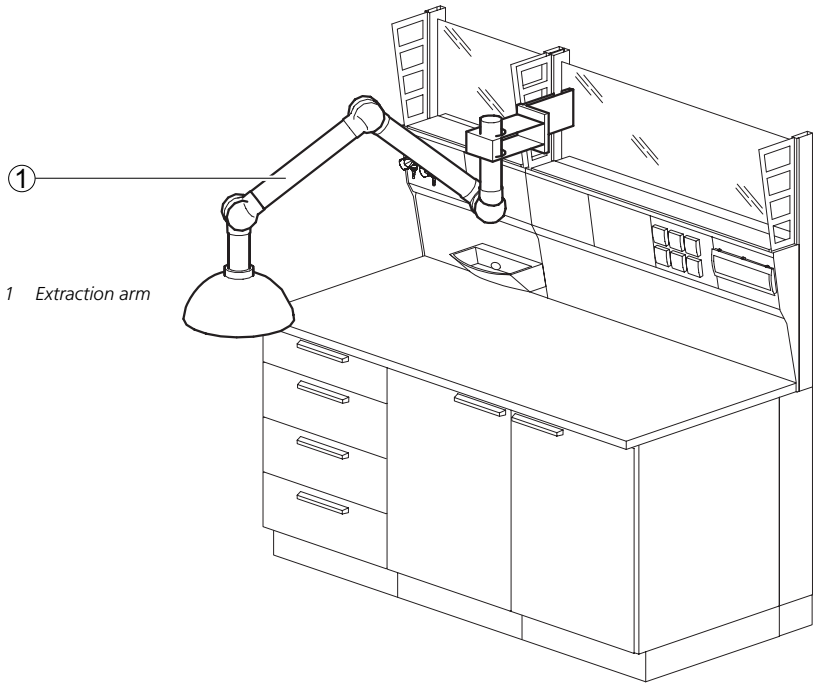

1 Extraction arm

Technical data

Dimension	50	75
Pipe system Ø [mm][1)]	50	75
Coupling hood Ø [mm]	350	
Extraction maximum [mm]	50	75

[1)] Pipe system Ø 50 mm only for fastening to the service wing

Ventilation technology	50	75
Minimum air exchange rate [m³/h]	50	100
Admission pressure [Pa]	150	
Admission pressure [Pa] with Waldner airflow damper	200	

Material	
Pipe	Anodised aluminium
Hinged bracket	Polypropylene
Coupling hood	Polycarbonate
Suction tip	Anodised aluminium

Local extraction devices
Snorkel hood

Intended use

- For the specific extraction of fumes
- Connection to extract air adapter in the service panel

Design

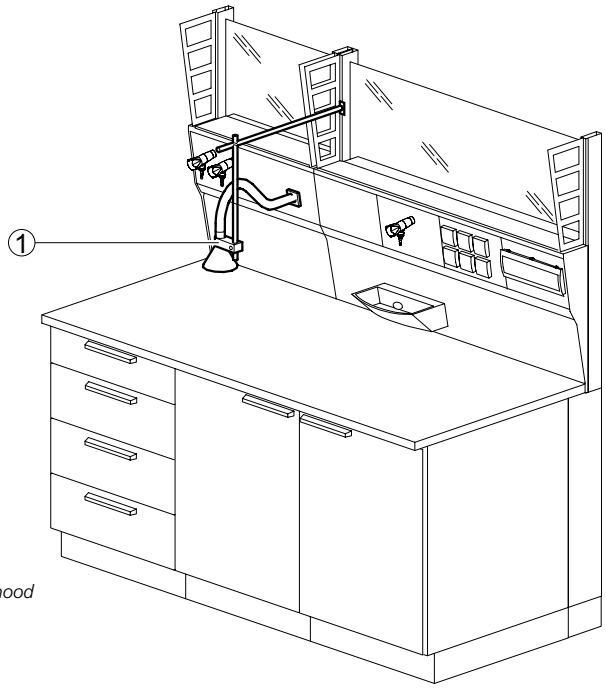

1 Snorkel hood

Technical data

Dimensions	
Length of pipe system [mm] at Ø 40 mm	1000
Hood Ø [mm]	120
Suction tip [mm]	50

Ventilation technology	
Minimum air exchange rate [m³/h]	5
Admission pressure [Pa]	200

Material	
Pipe and hood	Plastic

Intended use

- For the extraction of a specific area
- For fixing to service spines and to the wall

Design

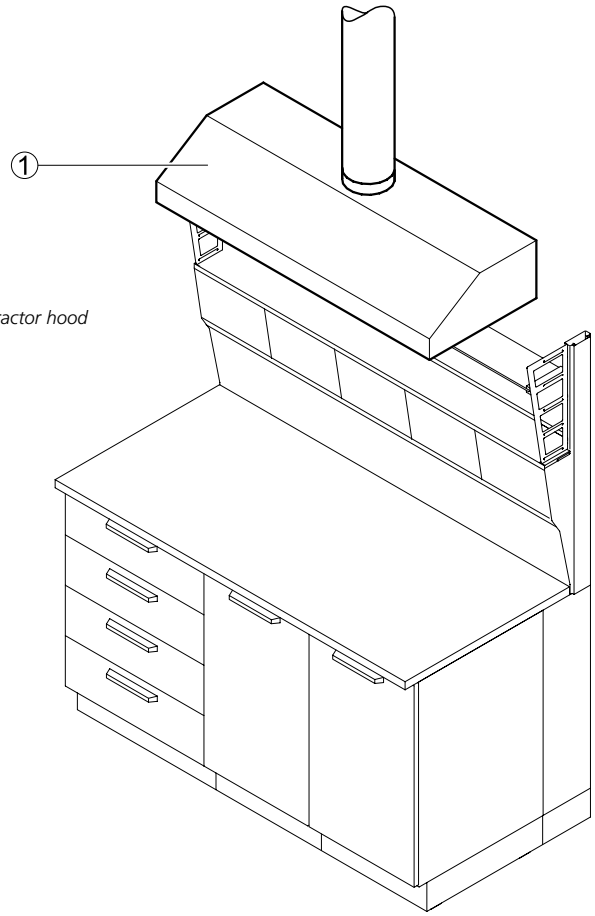

1 Extractor hood

Technical data

Dimensions	1200	1500
Width [mm]	1200	1500
Height x depth [mm]	300 x 600	
Extract air spigot Ø [mm]	200	

Ventilation technology	1200	1500
Minimum air exchange rate [m³/h]	480	600
Admission pressure [Pa]	25	30
Admission pressure [Pa] with Waldner airflow damper	150	

Material	
Extractor hood	Polypropylene

2 Service modules

Our ***SCALA*** range of laboratory furniture is defined by flexibility, mobility and ergonomical design to meet future requirements in the laboratory.

The supply of services plays a major part in a laboratory system.

Due to their modular design, our new service modules, i.e. service spine, suspended service boom, service column, service wing and service ceiling not only provide the services in the laboratory but also – more than ever – meet the ergonomical needs of the people working there. The service panels are inclined towards the user for easier accessibility of the fittings and control units.

Characterised by many useful details and a straightforward design, our service modules are fit to meet all requirements of laboratory design.

Our latest laboratory furniture system is made up of much fewer individual parts. Our service panels are fitted without joints, have even surfaces without edges, and the hidden accessory rail for supplementary functions is installed right where it is needed.

This simplifies cleaning and meets high hygienic requirements.

Service duct element 78
Service spine 80
Service wing 84
Suspended service boom 87
Service column 89
Service distribution terminal 92
Service wall duct 93
Bench-mounted service duct 94
Service ceiling 97

2 Service modules

Space saving services installation

The services supply installations are integrated in the service duct to save space. The modular service panels are inclined towards the user for ergonomic access and handling. This, in turn, leads to a greater usable depth of the worktop.

The service spine

Our service spine gives the designer a basis for designing the laboratory environment and provides a large variety of options for different designs and rapid changes. The service spine is an autonomous unit and can be combined with freely selectable bench frames to form a wall bench or a double work bench.

The accessory rail for suitable accessories

The accessory rail below the service panel level is used for fitting useful accessories such as shelves, scaffold poles and towel rail. These „helpers“ can be moved over all grids and securely fastened.

Simple upgradability

The modular service panels without screws can be quickly replaced if necessary.

Supply pipes, for example for water or compressed air, can be rapidly expanded and fitted using a quick release coupling system without interrupting laboratory operation.

Configuration details of the service spine

The level above the service panels can be used as a shelf. The inserted glass shelves can easily be removed for cleaning. Above it, shelves can be fastened in the lateral pillars. The unit can always be expanded to the top by mounting overbench cabinets.

The service column

As a compact services supply, our service column enables the transparent design of the room.

The service column is equipped with removable panels and an accessory rail and can either be mounted directly to the laboratory ceiling or to the service ceiling.

The suspended service boom

The suspended service boom can be freely suspended from the laboratory ceiling which is useful for certain areas in the laboratory.

It is fitted with removable service panels and an accessory rail and can also be used for floor plans independent of the services. The suspended service boom can be height-adjusted when mounted to the ceiling. It is also possible to install the suspended service boom to the service ceiling.

The service wall duct

As an alternative to the service spine, the service wall duct can be mounted at different heights and directly to a wall, or connected after a service spine fitted against a wall. It is also equipped with panel technology and an accessory rail for variable configuration.

2 Service modules

The service wing system

Our service wing defines the term „freedom in the laboratory" in a very special way: The new service wing is a major design element which integrates all services such as mechanical or electrical services, EDP, energy-saving lighting, extract air and the waste water disposal system, thus offering a high degree of flexibility.

The possibility of being able to plug in to the service wing for reliable supply and disposal connections practically everywhere means maximum freedom of movement and floor plan design in the laboratory.

The expansion stages of the service wing

The service wing has a modular design and offers four independent expansion stages for free combination. For every application. Using the removable service panels, fittings and connections can be placed as desired.

The accessory rail for useful accessories

The accessory rail accommodates useful accessories such as shelves, service distribution terminal and scaffold points. These can be moved over grids and securely fastened in every position.

Service wing for easy integration

Using the service wing simplifies the laboratory fitting out process and the coordination of different trades. One central feed point suffices.

Existing architectural features and building materials often require costly and time-consuming installations. Requiring minimum installation efforts, this is where the service wing is especially useful.

Energy-saving

The service wing is equipped with energy-saving lamps that illuminate the entire workspace and room and save up to 50 % power (with daylight-dependent control).

The service wing reaches the entire room

All areas of the laboratory are reached using T-elements and our wing segments of different lengths. For a large number of possible configurations. Thus it is possible to „dock“ anywhere, anytime.

All benches, racks, mobile sink units or mobile fume cupboards can be used as required under the wing. For a flexible working environment.

Precise planning, pre-assembly in the factory

The service wing for your laboratory project is fully pre-assembled by our laboratory builders in accordance with the plans.

You save assembly time on-site and your service wing will be quickly installed and ready to use.

Uncomplicated modification and expansion

Since it is an individual system unit, the service wing can always be modified.

Expanding, upgrading and checking the system are possible with little effort.

2 Service modules

Service ceiling for flexible laboratories

It is becoming increasingly important that users are able to adapt the laboratory quickly to their changing needs.

The Waldner service ceiling is the first unit to integrate all liquid laboratory services as well as gases, electricity, data supply lines, lighting, ventilation and supply and waste air ducts, and enables the laboratory to be adapted easily to new requirements so it can be used efficiently and variably.

In this way, the service ceiling makes the laboratory flexible and independent from connections, services, supply and disposal units, and the entire laboratory space can be freely adapted to the users' requirements and optimised according to their specific needs.

The service ceiling simplifies laboratory building planning

Entire floors can be covered with the service ceiling and can be restructured as required due to the grid-analogous sectioning, without interfering with the basic structures of the building. The costs for restructuring rooms are considerably reduced compared with conventional laboratory furniture systems.

The space-saving assembly of the integrated trades of our services system saves room height thus reducing the building size.

The service ceiling elements are pre-assembled at the factory and supplied with all components to the almost finished laboratory rooms. There is no need for coordinating different suppliers which, in turn, saves costs. Compared with conventional installation, 90 % less bore holes must be drilled for mounting the entire service ceiling.

The service ceiling can also be integrated into the existing architecture.

Fast modification of rooms

Our service ceiling system will help you respond to new tasks in the laboratory.

The mobile system parts such as benches, under-bench units or racks are rolled to another place, mobile components are attached to a suspended service boom, and work in the laboratory will continue to run smoothly according to the new requirements.

Connecting the office to the laboratory

New areas can be created using the service ceiling segments. Installations are changed from the nearest connection blocks. With our partition wall system, the office and the laboratory can operate side by side.

Economical pre-assembly saves precious time

The planned dimensions of the service ceiling for the laboratory project are divided into individual segments. Although very light, the system frame made of high-strength aluminium profiles is extremely stable. All service lines, waste and supply air ducts, power, lighting and connection blocks are mounted precisely to their positions. The individual components are dimensionally accurate which saves time-consuming rectification.

Only one on-site service transfer point

The service ceiling is supplied by an on-site service transfer point and equipped with connection points that are distributed over a freely definable area and connect to the movable service columns at the individual workplaces. This saves costs since it is not necessary to coordinate different trades.

Movable service columns

The service installations on each system frame are equipped with special connection blocks that supply the service columns through flexible pipes and cables. To move the module, the clamping must simply be opened and fastened again.

Service duct element

Intended use

- Services supply at laboratory workstations
- Integration of all service outlets including sockets and multiple connectors for information technology
- Expansion and modification of the services supply through clip-in service panels
- Use in service spines, service wall ducts, suspended service booms, service columns and bench-mounted service ducts
- Tool-free installation of supplementary service duct add-on parts such as pegboard, monitor arm, pipette holder, paper towel dispenser, universal storage area, etc.

Design

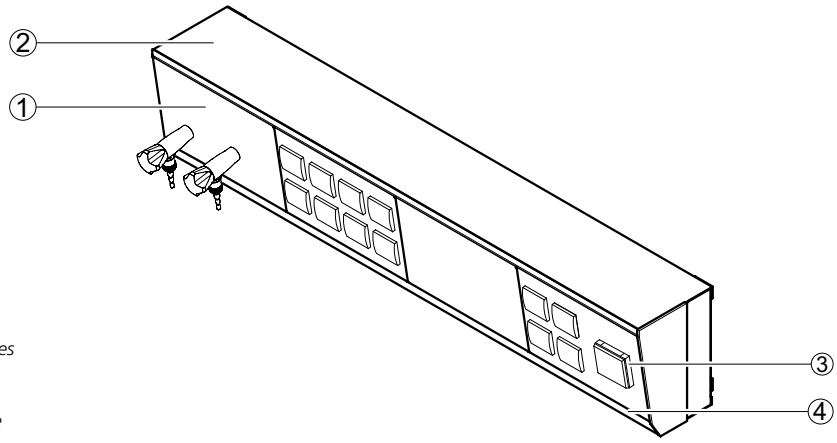

1 *Service panel with corner valves*
2 *Storage area*
3 *Service panel with sockets*
4 *Accessory rail for the tool-free installation of add-on parts*

Service panel variants

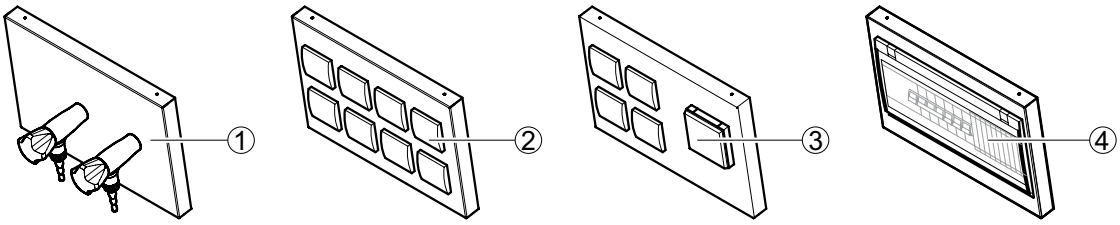

1 *Service panel with corner valves*
2 *Service panel with 8 sockets of the same type*
3 *Service panel with different types of sockets*
4 *Service panel with automatic circuit breakers*

Technical data

Dimensions					
Width [mm]	600	900	1200	1500	1800[1)]
Depth [mm] without supporting system	110				
Height [mm]	252				
Front inclination [°]	9				
Service panel, width x height [mm]	300 x 200				

[1)] The service duct can be extended as desired in grid lengths of 300 mm.

Service duct element

Design characteristics	
Number of service panels	Depending on the width of the service duct Supply of electrics and information technology depending on the combination with other service modules
Service panel	Clip-in
Splash guard	Protection type IP 44

Material	
Storage area	Solid grade laminate shelf 5 mm

Electrics	
Electrical supply	Sockets in service panels
Fuse box	Optional
Max. number of sockets 230 V per service panel	8
Max. number of sockets 400 V per service panel	2
Max. number of automatic circuit breakers per service panel	15

Sanitary technology	
Sanitary supply	Service panel with take-off valves for vacuum, gases and/or waters Services supply depending on the combination with other service modules
Max. number of corner valves per service panel	5
Max. number of high purity gas valves per service panel	3 to 5 depending on the type and function

Service spine

Intended use

- For floor-mounted services supply of:
  - Wall benches
  - Double work benches
  - Laboratory equipment on mobile tables or underbench constructions
  - Floor-mounted laboratory equipment
- Design versions for genetical engineering areas
- Modular fastening of cell add-on parts to the multipurpose uprights, e.g. glass shelves and OSB board, overbench cabinets, scaffold points, etc.
- Tool-free installation of supplementary service duct add-on parts such as pegboard, monitor arm, pipette holder, paper towel dispenser, universal storage area, etc.

Design

Service spine for wall bench

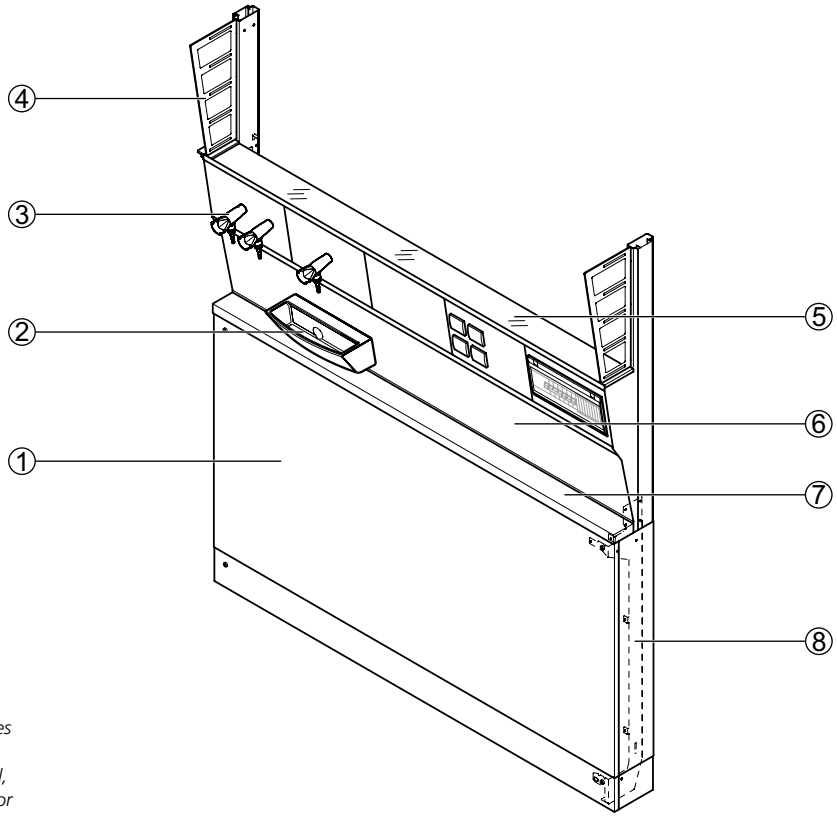

1 *Knee-hole cover panel*
2 *Sink module*
3 *Service panel with corner valves*
4 *Pillar for cell add-on parts*
5 *Service duct with service panel, glass shelf and accessory rail for add-on parts*
6 *Fascia panel of the service spine*
7 *Cantilever*
8 *Multipurpose upright*

Service spine for wall bench with cantilever and 2 glass shelves, working height 900 mm

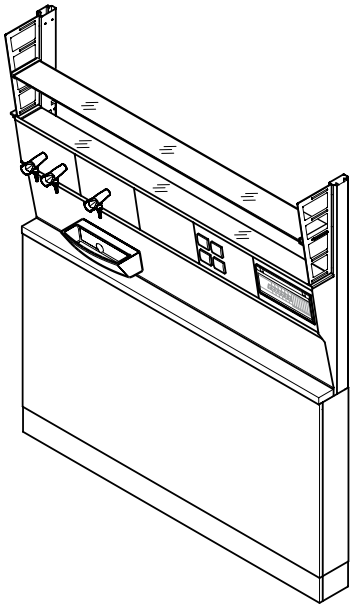

Service spine for wall bench with C-frame, underbench units on castors and overbench cabinet, working height 750 mm

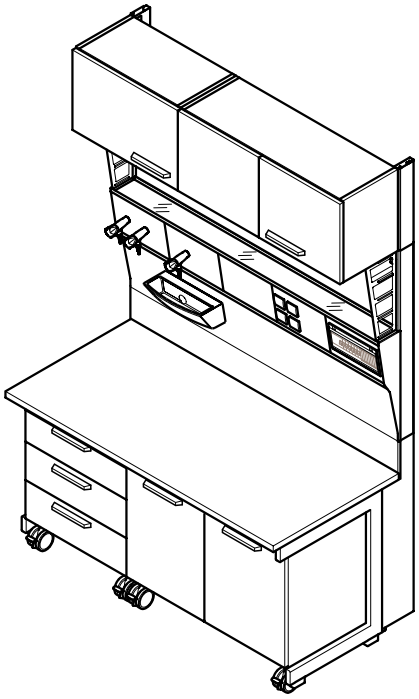

Service spine for wall bench with underbench units on plinth and media supply from above, working height 900 mm

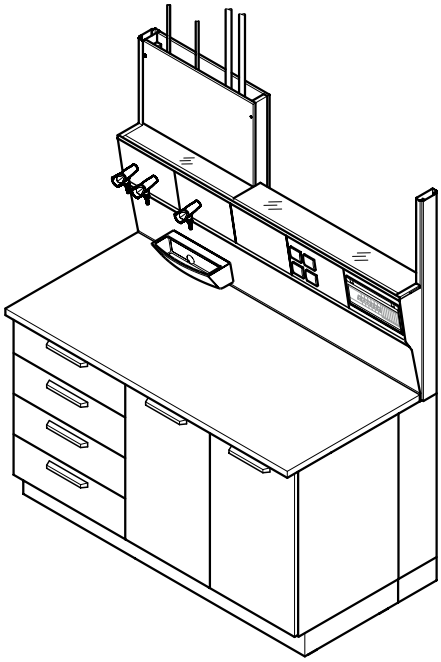

Service spine for double bench with underbench units on plinth and media supply from above, working height 900 mm

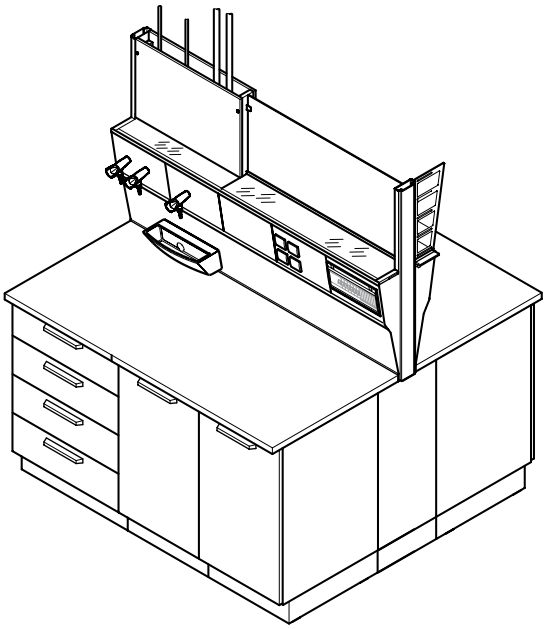

Service spine

Service spine for double bench with H-frame, underbench units on castors and overbench cabinet, working height 900 mm

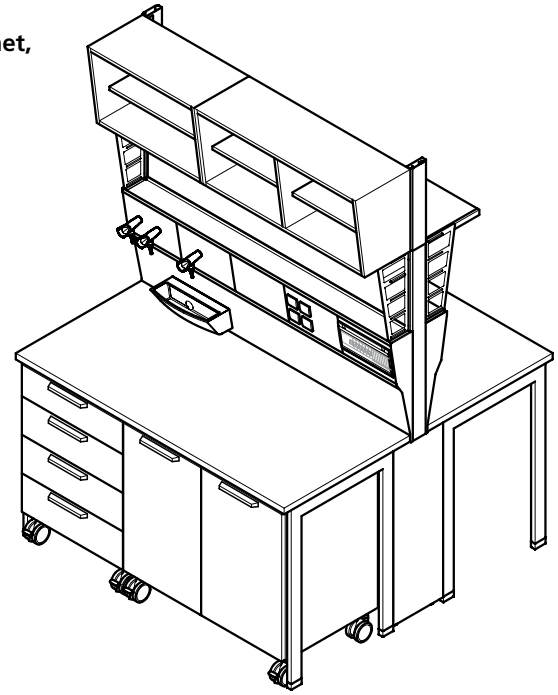

Dimensional drawing

Service spine for wall bench/double bench

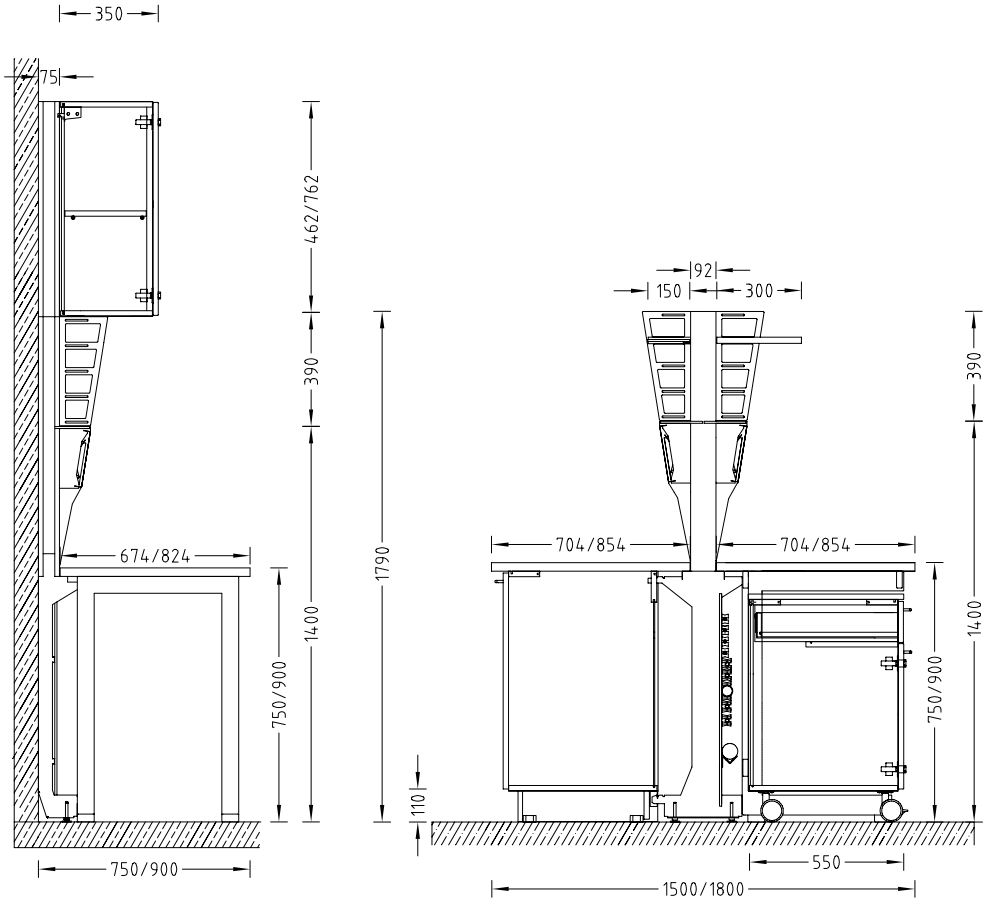

Technical data

Dimensions					
Width [mm]	600	900	1200	1500	1800
Depth, service spine for wall bench [mm] (incl. wall bench)	75 (750/900)				
Depth, service spine for double bench [mm] (incl. double bench)	92 (1500/1800)				
Height [mm]	1790				
Working height [mm]	750 900				
Height, pillar extension [mm] for overbench cabinet, height 460 mm	462				
Height, pillar extension [mm] for overbench cabinet, height 760 mm	762				
Height, pillar extension [mm] up to ceiling height 3500 mm	Depending on ceiling height				
Service panel, width x height [mm]	300 x 200				
Glass shelf, width x depth [mm]	Width, service spine x 150				
Shelf of OSB board, width x depth [mm]	Width, service spine x 300				

Load bearing capacity	
Glass shelf [kg]	20
Shelf of OSB board [kg]	30
Scaffold points [kg]	5

Design characteristics	
Modular design	Wall bench can be equipped on one side, double bench can be equipped on two sides Multipurpose uprights can be extended with service duct, e.g. for overbench cabinets Worktop, cantilever and underbench unit can be replaced without dismounting the installations Grid-independent mounting of accessories
Scaffold points ø [mm]	12 to 13
Number of service panels	Depending on the width of the service duct

Electrics	
Electrical supply	Sockets in the service panel
Fuse box	Optional

Sanitary technology	
Sanitary supply	Service panel with take-off valves for vacuum, gases and/or waters The supply pipes and cables are routed underneath the worktop or cantilever

Service wing

Intended use

- Laboratory areas with technical devices for services
- Services supply and disposal via the ceiling for:
  - Laboratory benches and sinks below the service wing
  - Local extraction devices and AeroEm fume cupboard
  - Laboratory equipment on mobile tables or underbench constructions
  - Floor-mounted laboratory equipment
- Tool-free installation of supplementary service wing add-on parts

Design

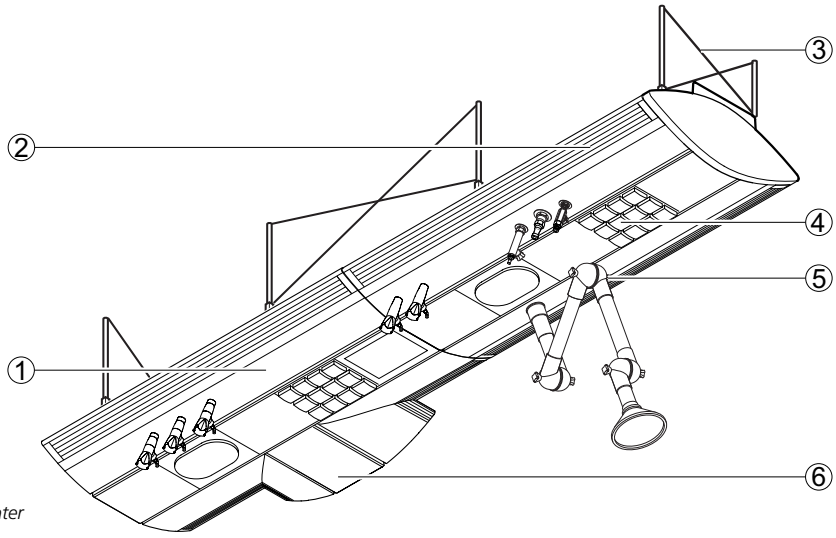

1 *Sanitary duct with gas and water taps*
2 *Wing edge (lamp or moulded part)*
3 *Braced support*
4 *Electrical trunking with electrical connections*
5 *Ventilation duct with local extraction*
6 *T wing element*

Expansion stage 1

- Electrical trunking with service panels for the power supply

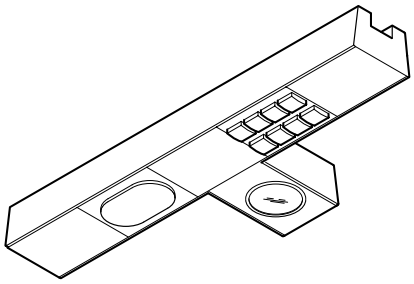

Expansion stage 2

- Electrical trunking with service panels for the power supply
- Wing edge designed as a lamp

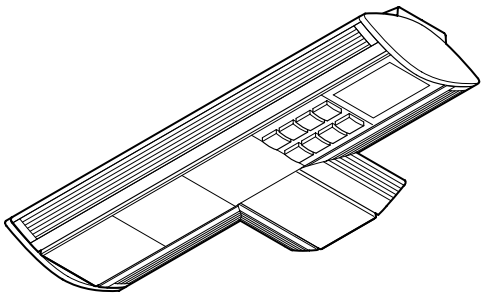

Expansion stage 3

- Electrical trunking with service panels for the power supply
- Sanitary duct
- Ventilation duct
- Wing edge designed as a lamp

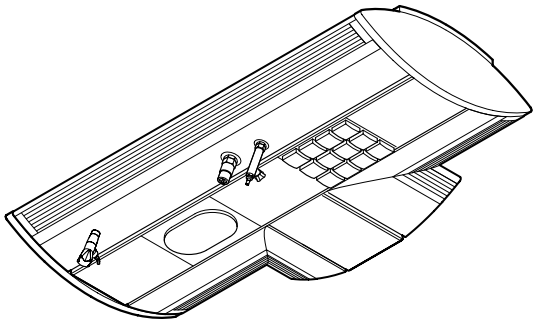

Expansion stage 4

- Electrical trunking with service panels for the power supply
- Sanitary duct
- Ventilation duct
- Wing edge designed as an accessory for the sanitary and ventilation routing

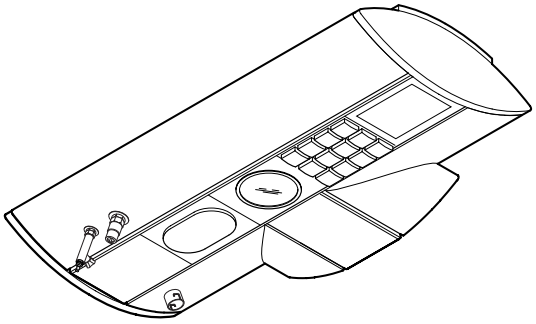

Dimensional drawing

Service wing, expansion stage 3

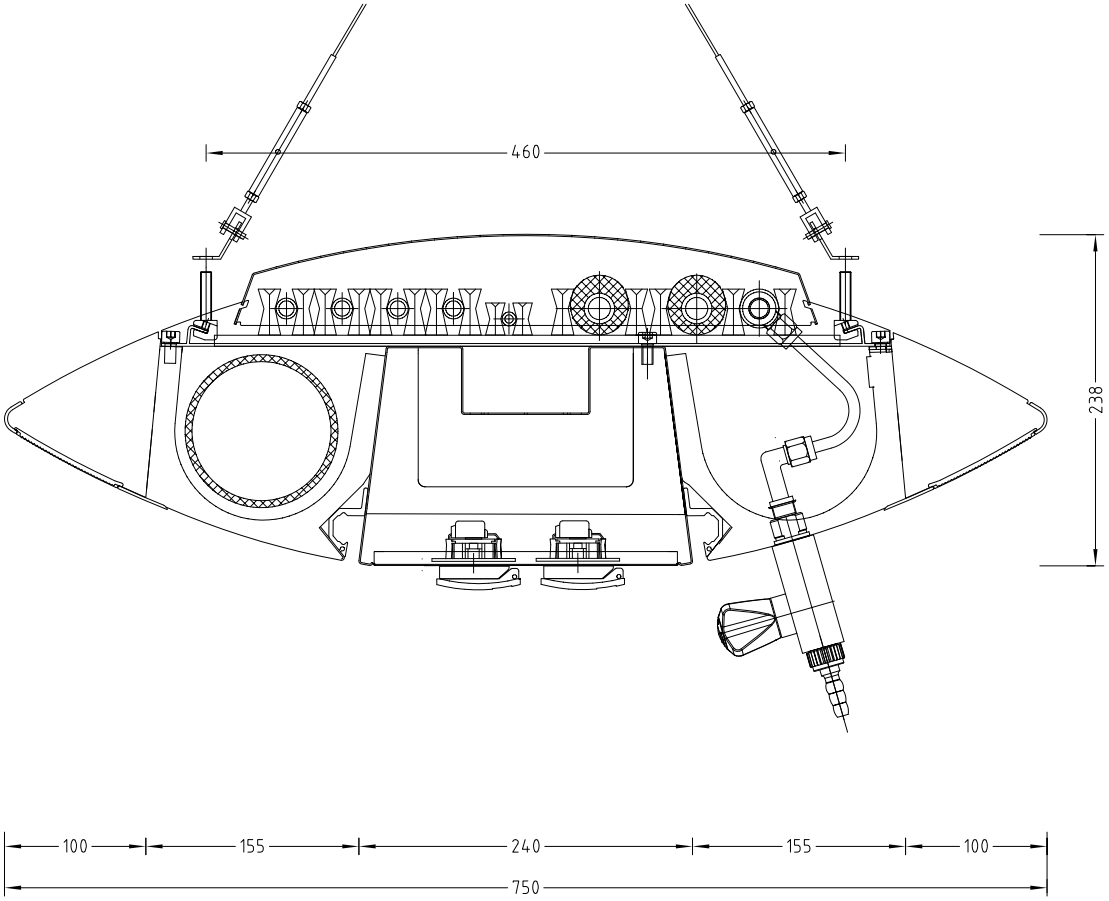

Service wing

Technical data

Dimensions				
Width [mm]	600	900	1200	1500
Depth [mm] with expansion stage 1	240			
Depth [mm] with expansion stage 2	496			
Depth [mm] with expansion stages 3 and 4	750			
Height [mm] without dust cover for expansion stages 1 and 2	181			
Height [mm] without dust cover for expansion stages 3 and 4	191			

Load bearing capacity	
Maximum permissible load [kg]	120

Design characteristics	
Construction	Feeding, wing, T-element as an option Flexible bracing to prevent vibrations Can be equipped on both sides Dust protection through grid elements installed above

Electrics	
Electrical supply	Electrical trunking with service panels for the power supply Connections for telephone, computer, monitor and loudspeaker as an option
Lighting	Lamps integrated in wing edges (direct and indirect lighting) as well as down light in the electrical trunking as an option
Fuse box	Optional

Sanitary technology	
Sanitary supply	Service panels with take-off valves for vacuum, gases and/or waters Supply pipes and cables, ventilation duct guiding Local extraction system and/or extract air spigot for AeroEM as an option

Suspended service boom

Intended use

- Services supply from the ceiling for:
  - Laboratory benches below the suspended service boom
  - Laboratory equipment on mobile tables or underbench constructions
  - Floor-mounted laboratory equipment
- Design versions for genetical engineering areas
- Modular fastening of boom add-on parts to the supporting construction, e.g. glass shelves and OSB board, scaffold points, etc.
- Tool-free installation of supplementary service duct add-on parts such as monitor arm, pipette holder, paper towel dispenser, universal storage area, etc.

Design

1 *Service panel with sockets*
2 *Service panel with corner valves*
3 *Shelf of OSB board*
4 *Media supply duct*
5 *Ceiling stator*
6 *Functional element*
7 *Glass shelf*
8 *Pillar*
9 *Storage area (service duct)*
10 *Service duct element*

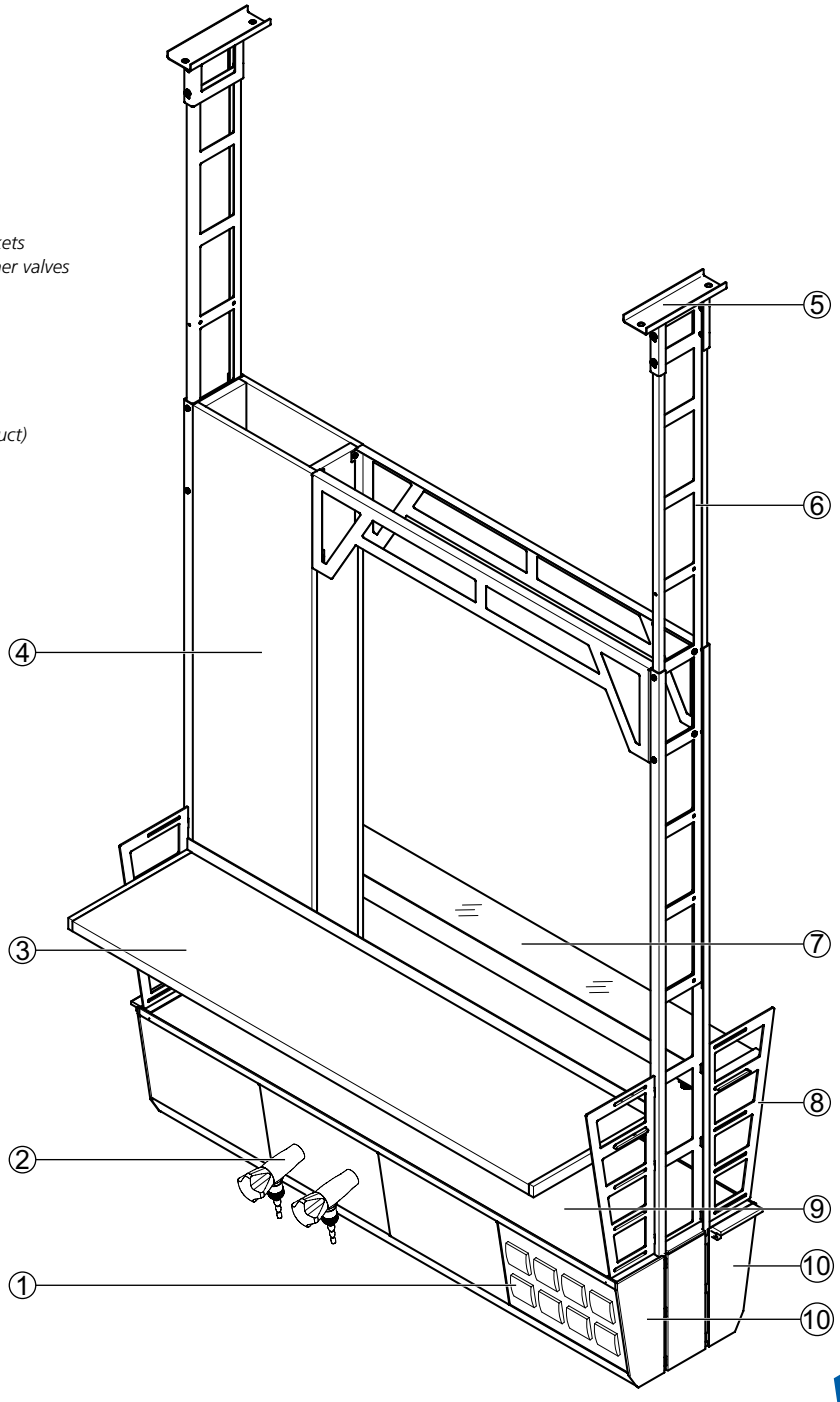

Suspended service boom

Technical data

Dimensions					
Width [mm]	600	900	1200	1500	1800
Depth [mm] without pillars	350				
Depth [mm] with pillars	471				
Recommended min. height [mm] bottom edge of suspended service boom to upper edge of finished floor	1750				
Height, supporting construction (max. up to ceiling height 4000 mm)	Depending on ceiling height				
Service panel, width x height [mm]	300 x 200				
Glass shelf, width x depth [mm]	Width, suspended service boom x 150				
Shelf of OSB board, width x depth [mm]	Width, suspended service boom x 300				

Load bearing capacity	
Maximum permissible load [kg]	120
Additional max. load bearing capacity, suspended service boom [kg] per grid	30
Glass shelf [kg]	20
Shelf of OSB board [kg]	30
Scaffold points [kg]	5

Design characteristics	
Construction	Functional elements to take up service ducts fastened to the ceiling and connected
Number of service panels (per side)	Depending on the width of the service duct
Scaffold points ø [mm]	12 to 13

Material	
Storage area (service duct)	Solid grade laminate 5 mm

Electrics	
Electrical supply	Sockets in the service panel
Fuse box	Optional

Sanitary technology	
Sanitary supply	Service panel with take-off valves for vacuum, gases and/or waters Supply pipes and cables in supply duct from above

Service column

Intended use

- Services supply from the ceiling for:
  - Laboratory benches below the suspended service column
  - Laboratory equipment on mobile tables or underbench constructions
  - Floor-mounted laboratory equipment
- Version with one or two sides
- Design versions for genetical engineering areas
- Additional storage area through the connection of service columns with shelves

Design

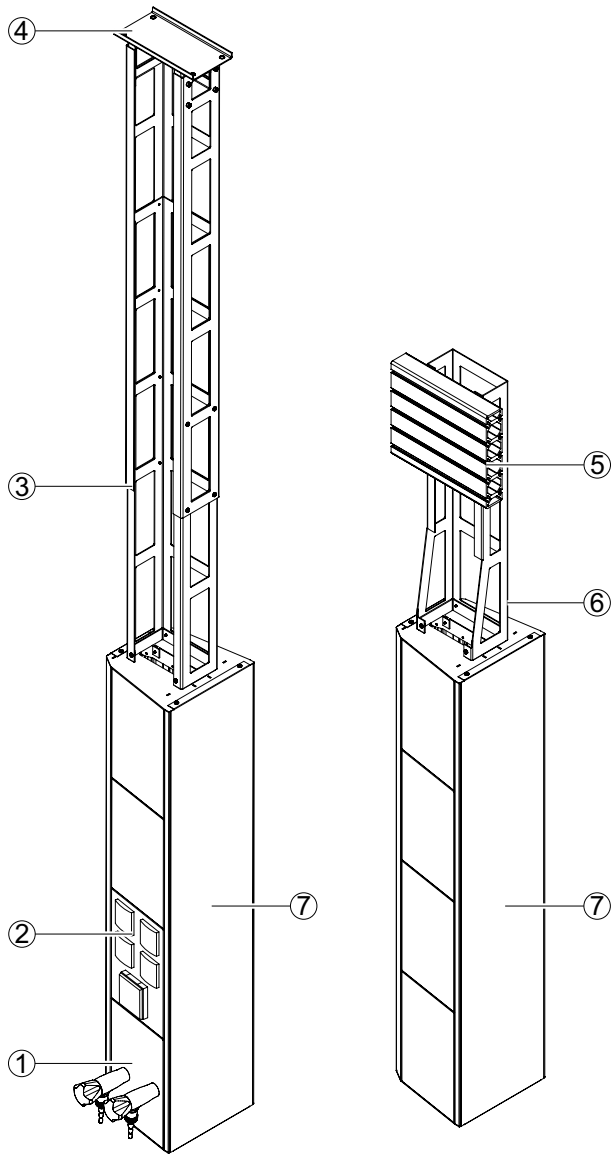

1 *Service panel with corner valves*
2 *Service panel with sockets*
3 *C-frame*
4 *Ceiling stator*
5 *Profile*
6 *C-frame for profile*
7 *Service duct element*

Service column

Two single-sided service columns with storage area

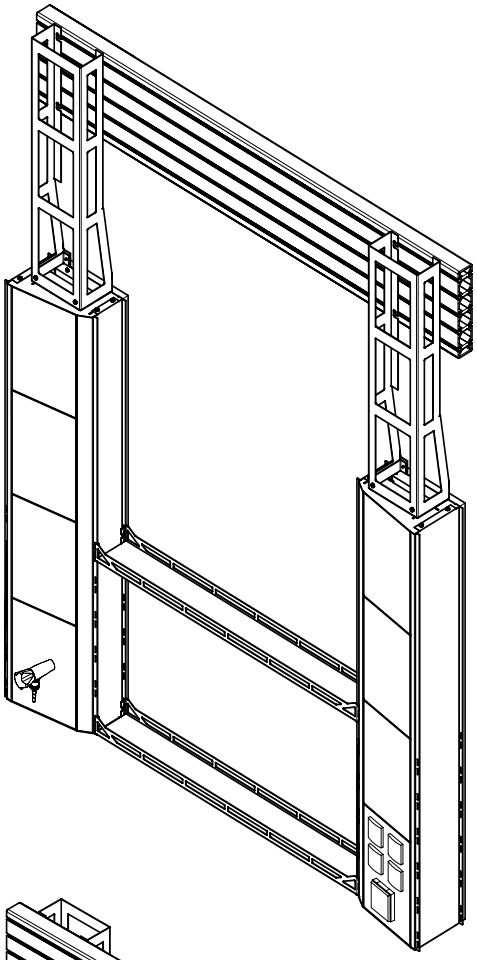

Two double-sided service columns with storage area

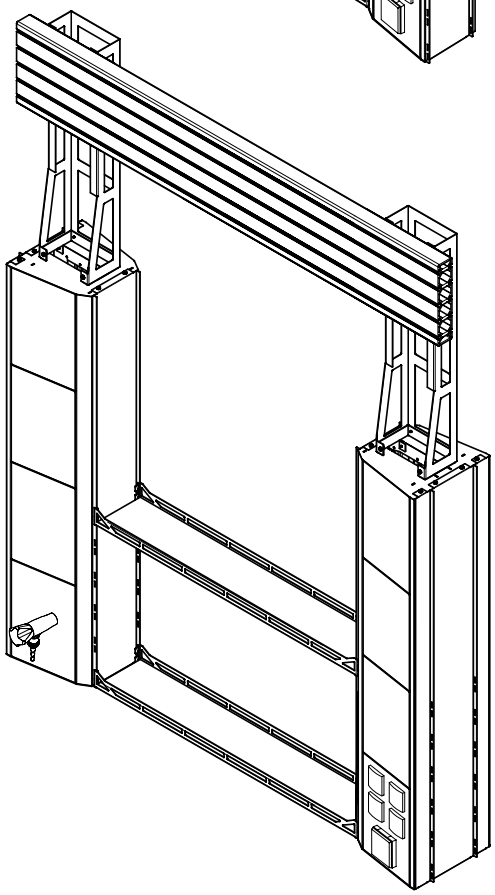

Technical data

Dimensions				
Width [mm]	252			
Depth [mm] single-sided	179			
Depth [mm] two sides	270			
Height [mm] without C supporting construction	1200			
Height, supporting construction [mm] (max. up to ceiling height 4000 mm)	Adapted to ceiling height			
Service panel, width x height [mm]	300 x 200			
Storage area, width [mm]	900	1200	1500	1800
Storage area, depth [mm] single-sided	105			
Storage area, depth [mm] two sides	155			

Load bearing capacity	
Maximum permissible load [kg]	120
Additional max. load bearing capacity [kg] Service column for each service module pair	20
Reagent repository [kg]	20
Scaffold points [kg]	5

Design characteristics	
Construction	C-frame for service duct mounted to the ceiling, can be equipped on one or two sides, height-adjustable, with shelves Can be expanded on one and/or two sides
Max. number of service panels (per side)	4
Scaffold points ø [mm]	12 to 13

Electrics	
Electrical supply	Sockets in the service panel
Fuse box	Optional

Sanitary technology	
Sanitary supply	Service panel with take-off valves for vacuum, gases and/or waters Accommodation of supply pipes and cables

Service distribution terminal

Intended use

- Services supply for clamping to a laboratory workstation
- The station is supplied through a service module which is fastened to the ceiling, such as suspended service boom, service column, service wing, service ceiling or a floor-mounted service spine

Design

1 Connection to several service modules
2 Clamping system
3 Service distribution terminal with sanitary installation
4 Plinth element
5 Service distribution terminal with 4 sockets

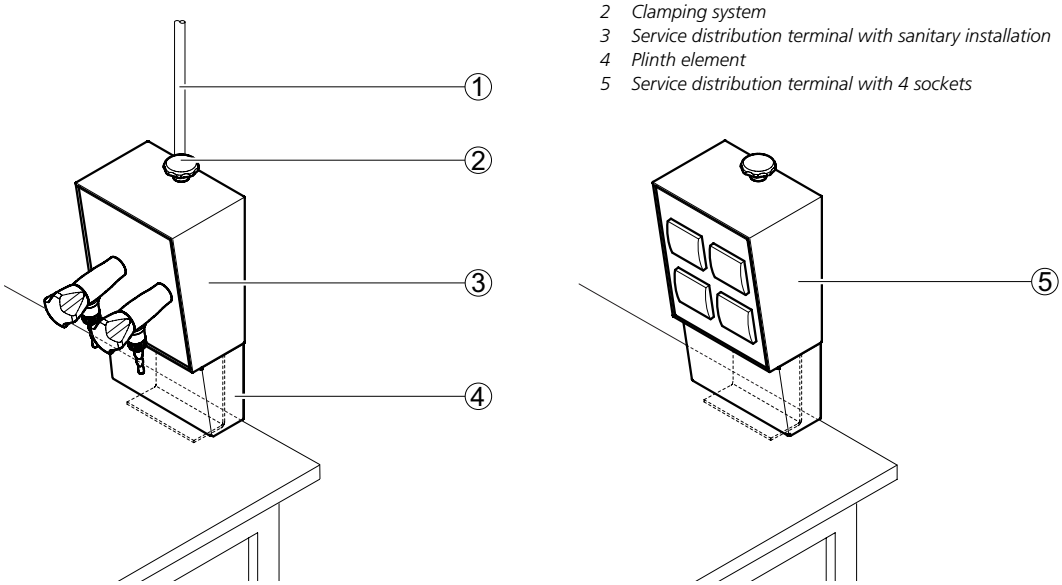

Technical data

Dimensions	
Width [mm]	158
Depth [mm]	118
Height [mm]	205
Height incl. plinth element [mm]	310
Service panel, width x height [mm]	150 x 200
Clamping area [mm]	10 – 100

Design characteristics	
Construction	Clamping system for worktop or other frames Services supply via service modules or service spines mounted to the ceiling Tension relief for pipes and cables between the service distribution terminal and service module unit through service beam and straps Cables and hoses are connected to the service module by means of plug-in couplings

Electrics	
Electrical supply	Max. of 4 sockets 230 V per service panel

Sanitary technology	
Sanitary supply	Various take-off valves for vacuum, gases or compressed air
Max. number of corner valves per service panel	2
Max. number of high purity gas valves per service panel	1 or 2 (depending on the type and function)

Service wall duct

Intended use

- Wall-mounted services supply for:
  - Laboratory benches under or in front of the service wall duct
  - Laboratory equipment on mobile tables or underbench constructions
  - Floor-mounted laboratory equipment
- Design versions for genetical engineering areas
- Tool-free installation of supplementary service duct add-on parts such as monitor arm, pipette holder, paper towel dispenser, universal storage area, etc.

Design

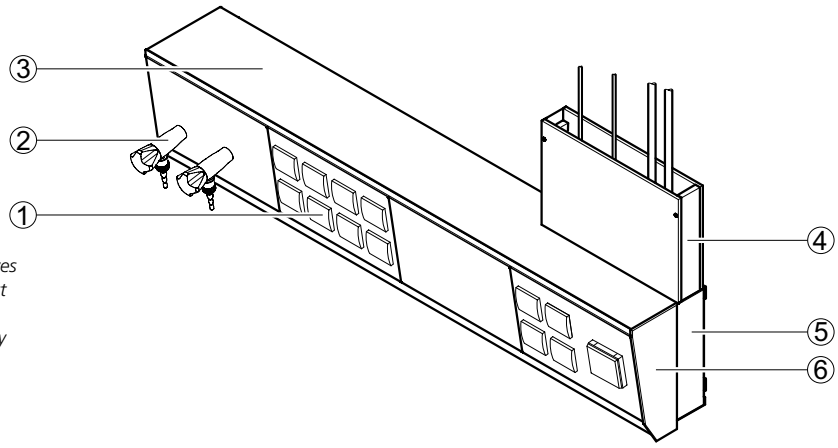

1 *Service panel with sockets*
2 *Service panel with corner valves*
3 *Storage area, service wall duct*
4 *Media supply from above*
5 *Fastening profile/media supply*
6 *Service duct element*

Technical data

Dimensions					
Width [mm]	600	900	1200	1500	1800[1)]
Depth [mm]	184				
Height [mm]	252				
Service panel, width x height [mm]	300 x 200				

[1)] The service wall duct can be extended as desired in grid lengths of 300 mm.

Load bearing capacity	
Storage area [kg]	20 per installed grid

Design characteristics	
Construction	Service duct for wall mounting
Number of service panels	Depending on the width of the service duct

Material	
Storage area	Solid grade laminate shelf 5 mm

Electrics	
Electrical supply	Service panel with sockets
Fuse box	Optional

Sanitary technology	
Sanitary supply	Service panel with take-off valves for vacuum, gases and/or waters Supply pipes in the fastening profile

Bench-mounted service duct

Intended use

- Services supply of double work benches
- Design versions for genetical engineering areas
- Modular fastening of cell add-on parts to the multipurpose uprights, e.g. glass shelves and OSB board, overbench cabinets, scaffold points, etc.
- Tool-free installation of supplementary service duct add-on parts such as pegboard, monitor arm, pipette holder, paper towel dispenser, universal storage area, etc.
- Not suitable for double benches where separate work surfaces are required (see also BGI/GUV-I 850-0)

Design

Bench-mounted service duct with cantilever frame and suspended underbench unit

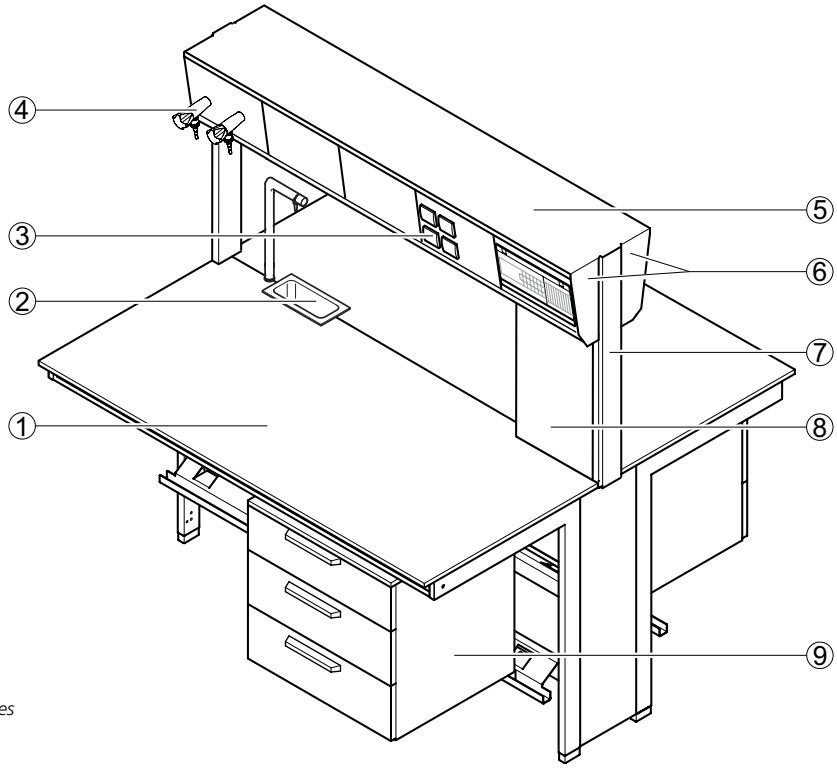

1 *Worktop*
2 *Drip cup with water outlet*
3 *Service panel with sockets*
4 *Service panel with corner valves*
5 *Storage area, service duct*
6 *Service duct element*
7 *Multipurpose upright*
8 *Media supply duct*
9 *Suspended underbench unit*

Bench-mounted service duct

Bench-mounted service duct with overbench cabinets, H-frame and underbench units on castors

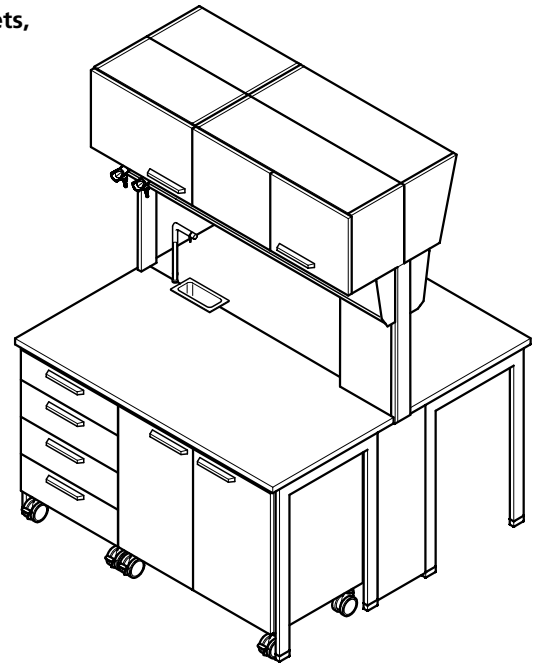

Bench-mounted service duct with overbench cabinets, pillar extension and underbench units on plinth

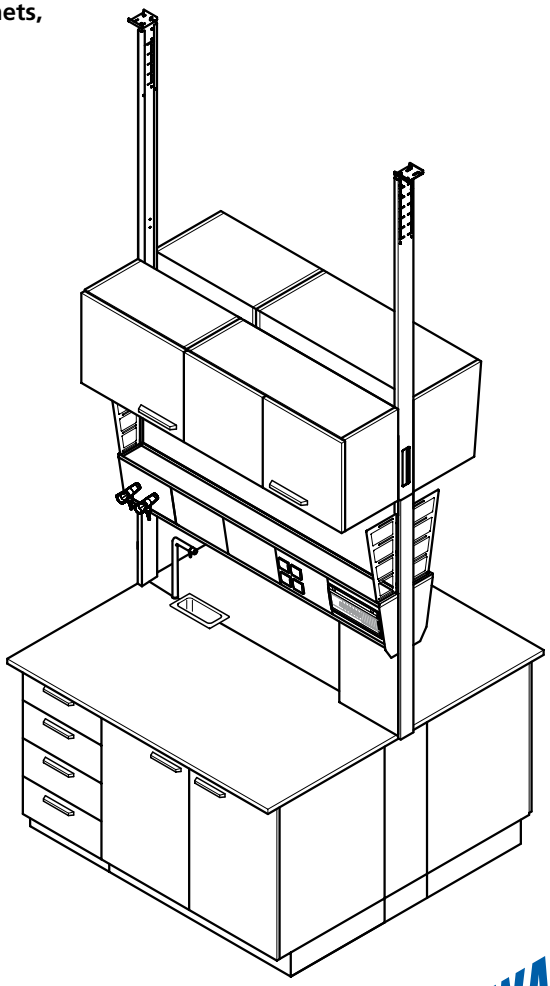

Bench-mounted service duct

Technical data

Dimensions					
Width [mm]	600	900	1200	1500	1800
Depth [mm]	310				
Height [mm]	1602				
Height, opening at working height 900 mm [mm]	450				
Height, pillar extension [mm] (for overbench cabinet, height 460 mm)	462				
Height, pillar extension [mm] (for overbench cabinet, height 760 mm)	762				
Height, pillar extension [mm] (up to ceiling height 3500 mm)	Depending on ceiling height				
Service panel, width x height [mm]	300 x 200				
Glass shelf, width x depth [mm]	Width, bench-mounted unit x 150				
Shelf of OSB board, width x depth [mm]	Width, bench-mounted unit x 300				

Load bearing capacity	
Glass shelf [kg]	20
Shelf of OSB board [kg]	30
Scaffold points [kg]	5

Design characteristics	
Construction	Double-sided service duct as bench-mounted unit with opening above the worktop
Number of service panels	Depending on duct width
Scaffold points ø [mm]	12 to 13

Material	
Storage area, service duct	Solid grade laminate shelf 5 mm

Electrics	
Electrical supply	Sockets in the service panel
Fuse box	Optional

Sanitary technology	
Sanitary supply	Service panel with take-off valves for vacuum, gases and/or waters Supply pipes in the bench-mounted unit

Intended use

- Ceiling supply system for laboratories with a highly flexible, modular design of the individual branches
- Suitable for all types of laboratories, such as chemical, analytical or physical laboratories
- For laboratories with flexible requirements
- Integration of all building services in the laboratory such as ventilation systems with control, electrical supply, lighting and services supply
- Individual adaption of the size to the building grid
- Very short installation times at the construction site

Design

Ceiling supply system

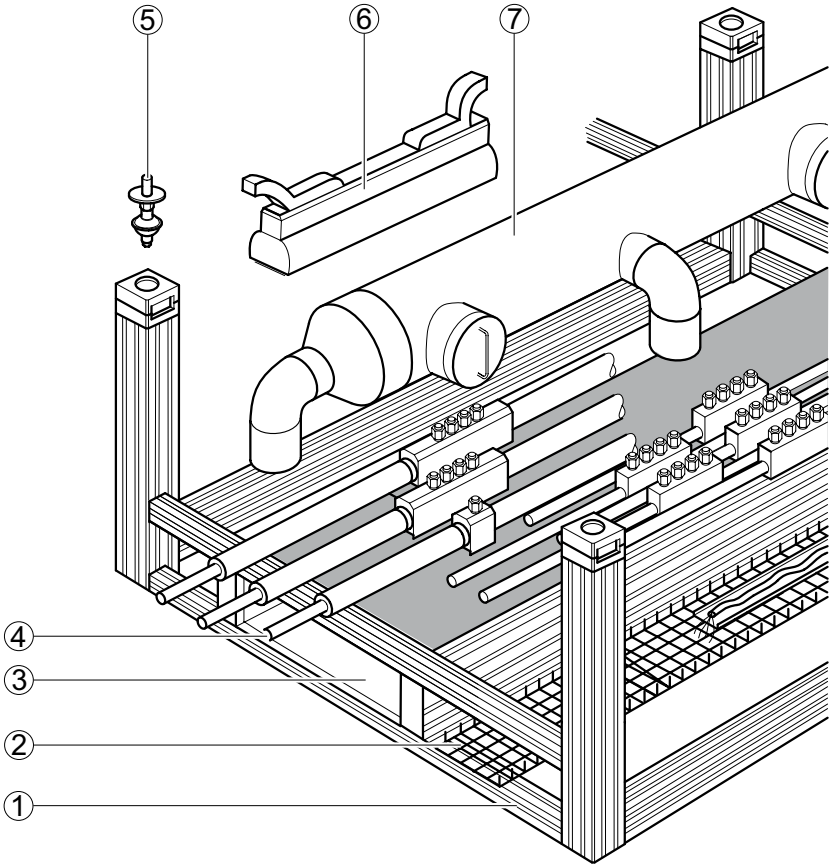

1 *Aluminium profile*
2 *Grid duct for the power supply and outlet boxes*
3 *Supply air duct with controller, sound absorber, etc. as an option*
4 *Sanitary supply with connection block*
5 *Ceiling stator for fastening to the floor ceiling*
6 *Lighting unit*
7 *Extract air pipe with connection spigot*

Service ceiling

Connections

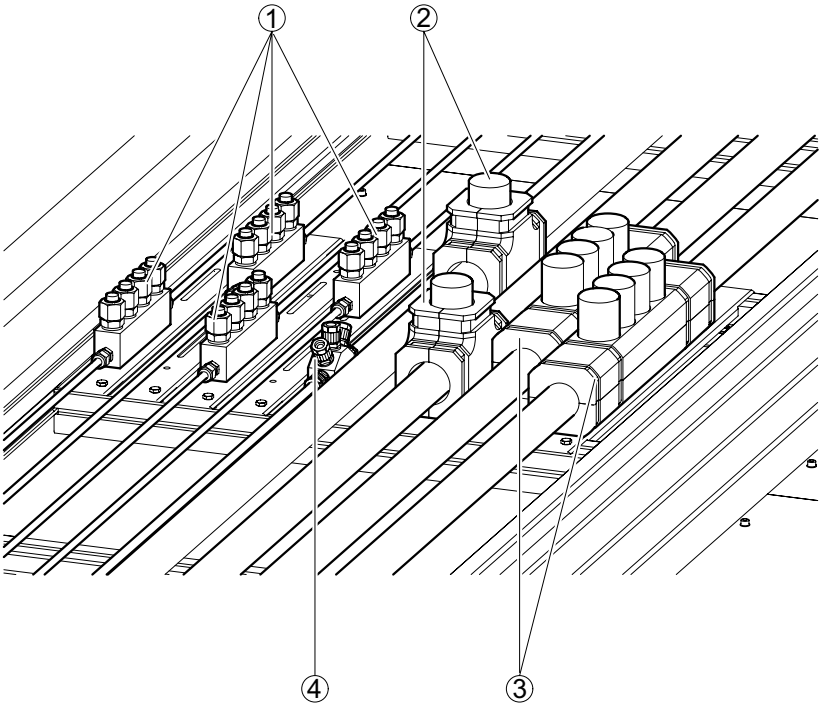

1 *Gas connection*
2 *Technical cooling water connection*
3 *Cooling water connection*
4 *Vacuum connection*

Technical data

Dimensions	
Width x depth	Adapted to the building grid
Module width [mm]	Recommended 3000 – 3800
Module depth [mm]	Recommended 2400 – 12000
Recommended mounting height [mm] (bottom edge of service ceiling)	2850

Load bearing capacity	
Maximum load bearing capacity [kg/m²] Aluminium profile 250 mm x 50 mm	500

Design characteristics	
Construction	Square module grid made up of aluminium profiles Modules carry service pipes, electrical trunking, supply air duct, extract air duct and lighting system as well as service modules (e. g. service columns) or laboratory furniture Friction-locked connection for partition walls Compensation of building tolerances with ball point supports possible Installation depends on the floor ceiling properties

Service ceiling

Electrics	
Electrical supply	Various power supply concepts are possible, such as busbar systems with outlet boxes Busbar systems with 32 A or 64 A
Cabling	Cable duct for additional power and data cable routing
Fuse box	Integrated in the busbar or service column

Sanitary technology	
Supply pipe	Intersection-free Simple retrofitting of all services Any number of connection blocks for vacuum, gases and waters possible
Connection blocks	2, 3 or 4 outlet couplings Connections can be made under pressure (exception: vacuum)
Cooling ceiling module	Optional

Ventilation technology	
Supply air	Various ventilation systems, e. g. Laminarflow, Wavedrall etc. Draft-free Very good air mixing
Extract air	Extract air duct with interfaces e. g. for fume cupboards (extract air spigot Ø 250 mm and Ø 90 mm) Mounted on ceiling grid With extract air spigot as an option
Sound absorber module	Optional
Filter module	Optional
Airflow damper	Optional
VAV module	Individual VAV for every room axis with flow section, airflow damper, heat exchanger and sound absorber as an option
Room control	For supply and extract air, temperature and room pressure as an option

3 Laboratory benches and sinks

In our new ***SCALA*** laboratory furniture system, laboratory benches are of major significance.

The consequent separation of services supply and furniture creates flexibility in the laboratory.

All variants of our benches can be selected with various worktop materials for a large number of application possibilities everywhere in the laboratory.

High stability, straightforward design and perfect appearance characterise our laboratory benches.

Access to water must meet various requirements in the laboratory.

Large sink modules, integrated sinks, drip cups and sink modules in service modules or fume cupboards are integrated in the laboratory as required by the specific situation.

Wherever mobility is required, our mobile units are used: under the service wing, for the suspended service boom, the service columns and the service ceiling – for fast moving in the laboratory.

Laboratory benches **106**
Combinations of materials/bench frames 106
Worktop material 108
Bench with H-frame 113
Bench with C-frame 114
Bench with cantilever frame 115
Bench with self-supporting underbench units 116

Mobile tables **117**

Laboratory sinks **118**
Laboratory sink 118
Laboratory sink module 119
Drip cup on service spine 121
Drip cup in worktop 122
Mobile sink 123
AquaEL 124

Special tables **125**
Add-on table for low level fume cupboards 125
Balance table 126
Rack 127
Swing 128
Height-adjustable table 129
Round table 130
Sliding element Sekretär 131
Sliding element Assistent 132
Sliding element Protector 133

3 Laboratory benches and sinks

Our benches offer a large number of possible applications.

Our new bench frames are made of precision rectangular tubes with reinforced cross-section. The bench frames can carry a load of 200 kg without any problem. Optimally protected against external effects through the entirely homogenous powder coating, our bench frames have a flawless appearance.

The same applies to the surfaces of our worktops. You can choose from our wide range of materials according to your requirements.

Bench frames for different needs

With their constructional designs, C-frame, H-frame and cantilever bench frames form the basis for our work benches depending on the requirement and application.

Different standard widths available

In order to be able to divide the workplaces in your laboratory to suit your needs, we offer a large number of frame widths.

Improved level compensation

Our new flush-mounted height-adjustable feet for C and H-frames offer up to 23 mm regulating distance, as an option up to 50 mm. Easy access and adjustment, for steady positioning.

Easy cleaning

The new height adjustment holds the C-frame approx. 30 mm above the floor. This makes cleaning the floor extremely easy.

H-frame

provides a high level of stability for add-on tables, mobile tables and analysis tables for working sitting or standing.

Underbench cabinets can be mobile or suspended and moved independent of modular size. Sitting niches are therefore possible anywhere.

C-frames

are extremely steady and can be loaded with 200 kg. They provide users with a large amount of knee and legroom with mobile and suspended underbench units.

Cantilever frame

provides the greatest legroom and lightest visual impact. It is fitted to service spines or directly to walls via its cantilever bracket design.

Suspended underbench units that can be moved

Our new profile enables underbench units suspended in cantilever and C-frames to be moved across frames.

Movable knee-hole cover panels

For benches without underbench units we use movable and height-adjustable knee-hole cover panels. In this way, installations routed below the rear side of the table can be hidden.

Other useful helpers

Add-on tables, Swings and round tables are autonomous objects and can be combined to form new modules as required. Our height-adjustable bench can be adjusted from 700 to 950 mm.

Our multi-talent: the rack

The rack is perfect for fitting items of equipment, AquaEl and others. The robust shelves are height-adjustable and the castors enable the fast changing of location.

3 Laboratory benches and sinks

There are no limits to using sinks and drip cups in the laboratory. With a new appearance that matches our range of laboratory furniture ***SCALA*** and is made of tried-and-tested materials, our sink elements can be perfectly integrated where they are needed. Materials such as stoneware, polypropylene, stainless steel and epoxy are extremely durable.

Stoneware sink modules

Our sink modules can be integrated as end sink units or along the service spine. The module made of high-strength baked and glazed stoneware in 1200 mm width is made of one piece without joints. Our sink modules are mounted on plinth units that can be fitted with drawers and hinged or tilting doors as desired.

Sink modules and drip cups

Sink modules made of stoneware or polypropylene are integrated into the service spine above the bench. Drip cups are fitted directly in the worktop. They are made of stoneware, polypropylene, epoxy resin or stainless steel.

Laboratory sink

Sinks are permanently installed components of laboratory furniture and placed against the service spine or a wall. Sinks can be combined with various types of worktop materials in many versions.

Mobile sink and AquaEl

The mobile sink with castors supplements the variable laboratory below the service wing and service ceiling. The mobile sink is connected directly to the service wing or service ceiling system via flexible pipes. AquaEl is a ready to plug in compact system for the easy supply and disposal of water in service modules. A lifting unit disposes of the waste water through the respective system.

Laboratory benches
Combinations of materials/bench frames

Combinations of worktop and bench frame materials

Material, worktop	Coated particle-board	Coated particle-board (postforming)	Solid grade laminate	Solid grade laminate Trespa Toplab+	Polypropylene
H-frame	x	x	x	x	x
C-frame	x	x	x	x	x
Cantilever bench frame	x	x	x	x	x
Mobile table frame	x	x	x	x	x
H-frame for low level fume cupboards	–	–	–	–	x [4]
Balance table	x	x	–	–	–
Swing	x [1]	–	–	–	–
Round table	x [1]	–	–	–	–
Rack	x [2]	–	–	–	–
Sliding elements	x [3]	–	–	–	–

[1] Walnut veneer or light grey
[2] Shelves white, top of Sekretär walnut veneer
[3] Only walnut veneer
[4] Material with surrounding increased edge

Material, worktop	Epoxy	Stainless steel	Stoneware	Composite worktop	Glass
H-frame	x	x	x	x	x
C-frame	x	x	x	x	x
Cantilever bench frame	x	x	x	x	x
Mobile table frame	x	x	x	x	x
H-frame for low level fume cupboards	x [4)]	x [4)]	x [4)]	–	–

[4)] Material with surrounding increased edge

Laboratory benches
Worktop material

Melamine resin facing/postforming	
Critical substances	Acids in concentrations > 10 %
Damaging substances	Concentrated hydrochloric acids Nitric acid Heated sulphuric acid
Advantage	Flat
Limitations	Joints sensitive to moisture Medium chemical resistance
Use	Mobile table, add-on table, window benches Instrument benches and laboratory benches in the dry area Cannot be used in the moist or wet area
Weight [kg/m²]	19.6
Overall thickness [mm]	30
	Light grey NCS S 3005 R80B

Polypropylene	
Critical substances	Hydrocarbons Citric acid Oxalic acid Carbon tetrachloride Diesel oil
Damaging substances	Ozone Concentrated nitric acid Chloroform Petrol Benzol
Advantage	No joints Flat Light High chemical resistance to acids and many solvents Easy to dispose of Less breakage of glass
Limitations	Soft surface sensitive to scratches Sensitive to heat
Use	Areas with high resistance to chemicals Working with hydrofluoric acid Radio-isotope area Areas in which the lack of joints is important
Weight [kg/m²]	20.3
Overall thickness [mm] Increased edge [mm]	30 7
	Light grey NCS S 3005 R80B

Solid grade laminate	
Critical substances	Acids in concentrations > 10 %
Damaging substances	Concentrated hydrochloric acids Nitric acid Heated sulphuric acid
Advantage	Moisture-resistant Flat Easy to dispose of
Limitations	Reduced coating thickness
Use	Wet rooms Physical laboratories Tables with average load
Weight [kg/m²]	26.4
Overall thickness [mm]	19
	Light grey NCS S 3005 R80B

Solid grade laminate Trespa Toplab+	
Critical substances	Acids in concentrations > 10 %
Damaging substances	Concentrated hydrochloric acids Nitric acid Heated sulphuric acid
Advantage	Antibacterial Highly-compressed surface structure High chemical resistance Moisture-resistant Flat Easy to dispose of
Limitations	Reduced coating thickness
Use	Chemical, microbiological, genetical-engineering laboratories
Weight [kg/m²]	26.4
Overall thickness [mm]	19
	Glacier blue Similar to NCS 1010 R80B

Laboratory benches
Worktop material

Epoxy	
Critical substances	Various solvents Diluted acids
Damaging substances	Hydrofluoric acid Concentrated warm mineral acids
Advantage	No joints Flat Solid panel High mechanical load capacity Easy to dispose of
Limitations	Surface sensitive to scratches Sensitive to concentrated acids
Use	Laboratory workstation of all type
Weight [kg/m²]	32
Overall thickness [mm] Increased edge [mm]	19 7
	Platinum grey Similar to NCS S 4202-R

Stainless steel	
Critical substances	Cadmium Lactic acid Oxalic acid
Damaging substances	Compounds containing chlorine and bromine Formic acid Sulphuric acid
Advantage	No joints High resistance to solvents High temperature resistance
Limitations	Sensitive to halogens and their compounds
Use	For maximum loads in the area of decontamination and moisture resistance as well as solvent resistance Biology Microbiology Pharmacy Radio-isotope area Pathology
Weight [kg/m²]	27.5
Overall thickness [mm] Increased edge [mm]	30 7
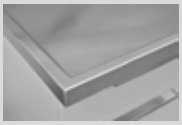	

Laboratory benches
Worktop material

Stoneware	
Critical substances	None
Damaging substances	Hydrofluoric acid
Advantage	Best chemical resistance Mechanically stable Easy to dispose of
Limitations	Evenness tolerances due to firing process Thermodynamic stress limited
Use	Areas subject to very high chemical and mechanical stress
Weight [kg/m²]	56
Overall thickness [mm] Increased edge [mm]	26 7
	Light grey NCS S 3005 R80B

Composite worktop	
Critical substances	None
Damaging substances	Hydrofluoric acid
Advantage	Flat Lighter than stoneware Best chemical resistance Easy to dispose of
Limitations	Thermodynamic stress limited
Use	Areas with very high chemical stress
Weight [kg/m²]	40
Overall thickness [mm] Increased edge (epoxy resin) [mm]	30 7
	White Similar to NCS S 0300-N

Laboratory benches
Worktop material

Glass	
Critical substances	None
Damaging substances	Hydrofluoric acid
Advantage	Flat High chemical resistance
Limitations	Sensitive to knocks at corners and edges
Use	Laboratory benches of all types subject to large amounts of chemicals
Weight [kg/m²]	38
Overall thickness [mm]	30
	Light green NCS S 2010 G10Y

Intended use

- Bench frame with worktop made of various materials as a work surface and storage area for laboratory work
- Supporting construction for analytical equipment and superstructures

Design

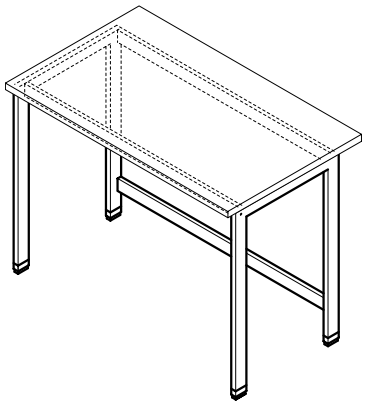

Technical data

Dimensions					
Width [mm]	600	900	1200	1500	1800
Depth [mm]	600 750 900				
Working height [mm]	750 900				

Load bearing capacity	
H-frame [kg]	200 (for fixing to the wall or for fixing to a service spine)

Design characteristics	
Construction	For suspended underbench units, cannot be moved for all kinds of frames For underbench units on castors
Height-adjustable feet	Individually adjustable

Material	
Bench frame	Steel profile 60/25/2 mm
Worktop	Depending on requirement
Height-adjustable feet	Plastic housing with steel spindle

Laboratory benches
Bench with C-frame

Intended use

- Bench frame with worktop made of various materials as a work surface and storage area for laboratory work
- Supporting construction for analytical equipment and superstructures

Design

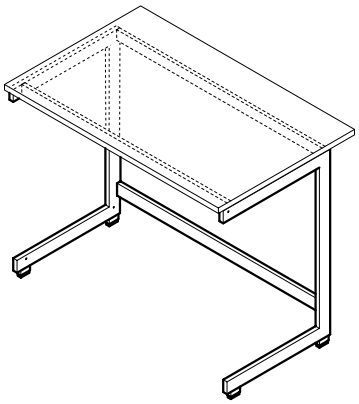

Technical data

Dimensions					
Width [mm]	600	900	1200	1500	1800
Depth [mm]	600 750 900				
Working height [mm]	750 900				

Load bearing capacity	
C-frame [kg]	200

Design characteristics	
Construction	For suspended underbench units, can be moved for all kinds of frames For movable underbench units
Height-adjustable feet	Individually adjustable

Material	
Bench frame	Steel profile 70/25/3 mm
Worktop	Depending on requirement
Height-adjustable feet	Plastic housing with steel spindle

Intended use

- Bench frame with worktop made of various materials as a work surface and storage area for laboratory work
- Supporting construction for analytical equipment and superstructures
- For fixing to the wall or for fixing to a service spine

Design

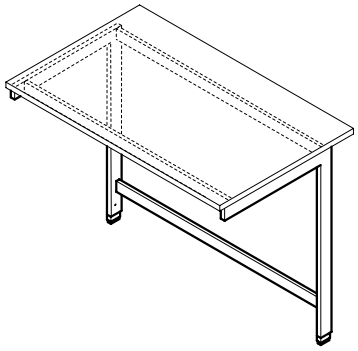

Technical data

Dimensions					
Width [mm]	600	900	1200	1500	1800
Depth [mm]	750 900				
Working height [mm]	750 900				

Load bearing capacity	
Cantilever frame [kg]	200 (for permanent mounting to a wall or a wall-mounted service spine)

Design characteristics	
Construction	For suspended and movable underbench units, can be moved for all kinds of frames
Height-adjustable feet	Individually adjustable

Material	
Bench frame	Steel profile 70/25/3 mm
Worktop	Depending on requirement
Height-adjustable feet	Plastic housing with steel spindle

Laboratory benches
Bench with self-supporting underbench units

Intended use

- Self-supporting underbench unit on plinth with worktop made of various materials as a work surface and storage area for laboratory work
- Supporting construction for analytical equipment and superstructures

Design

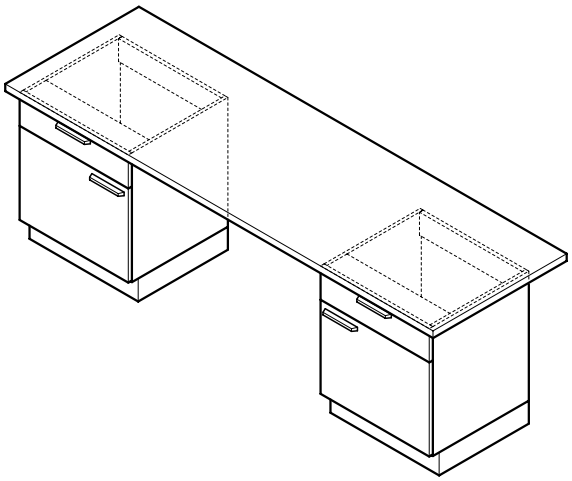

Technical data

Dimensions	
Overall width [mm]	Max. 3000
Width, underbench unit [mm]	450 600 900 1200
Total depth [mm]	750 900
Working height [mm]	750 900

Material	
Worktop	Depending on width and requirement

Load bearing capacity	
Bench with self-supporting underbench unit [kg]	200

Intended use

- Movable bench frame with worktop made of various materials as a work surface and storage area for laboratory work
- Movable supporting construction for analytical equipment and superstructures

Design

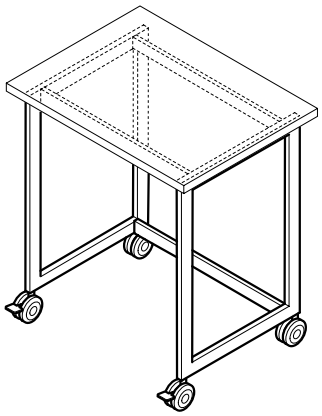

Technical data

Dimensions			
Width [mm]	900	1200	1500
Depth [mm]	600 750 900		
Working height [mm]	750 900		

Load bearing capacity	
Mobile table [kg]	150
Per heavy load castor [kg]	110

Design characteristics	
Heavy load castors	4, of which 2 can be locked (castor and steering axle can be locked)
Shelf	Optional
Underbench unit	Optional

Material	
Bench frame	Steel profile 60/25/2 mm
Worktop	Depending on requirement

Laboratory sinks
Laboratory sink

Intended use

- Water supply and disposal
- For cleaning operating equipment
- To take up large amounts of water
- Not suitable for the disposal of chemicals

Design

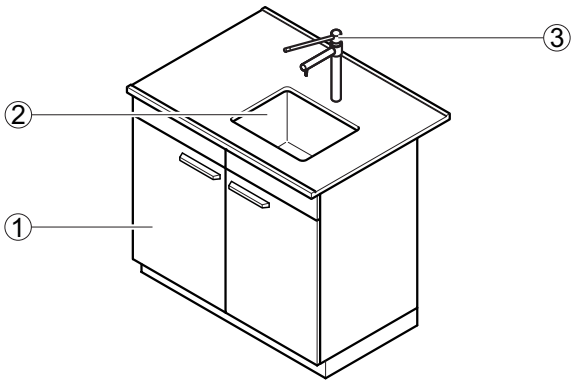

1 Underbench unit
2 Sink
3 Outlet

Technical data

Material Worktop	Material Sinks	Sink dimensions Width x depth x height [mm]	Type of installation
Stoneware	Stoneware	400 x 400 x 250 500 x 400 x 250	Sink installed flush with the worktop
Melamine resin facing, Solid grade laminate, Trespa Toplab+	Polypropylene	320 x 320 x 200 400 x 400 x 250 500 x 400 x 250	Sink with surrounding increased edge installed in the worktop from above
Melamine resin facing, Solid grade laminate, Trespa Toplab+	Stainless steel	340 x 370 x 150 500 x 400 x 250	Sink with surrounding increased edge installed in the worktop from above
Polypropylene	Polypropylene	385 x 385 x 250 485 x 385 x 250	Sink attached to the worktop from the bottom and welded
Stainless steel	Stainless steel	400 x 400 x 250 500 x 400 x 250	Sink welded in flush with the worktop
Composite worktop	Stoneware	380 x 380 x 250 530 x 380 x 250	Sink installed flush with the worktop
Epoxy	Epoxy	406 x 305 x 203 406 x 406 x 190 457 x 380 x 279	Sink installed flush with the worktop

Dimensions					
Width [mm]	600	900	1200	1500	1800
Depth [mm]			600[1)] 675[1)] 705[1)] 750 825 855 900		
Working height [mm]			900		

[1)] Positioning of the outlets on the side of the sink, if required

Sanitary technology	
Water connection	Permanent connection
Waste water connection	Permanent connection with siphon
Water fitting (tap)	Bench-mounted service outlet as an option
Eye shower	Optional

Intended use

- Water supply and disposal
- For cleaning operating equipment
- To take up large amounts of water
- For installation on special underbench units
- Not suitable for the disposal of chemicals

Design

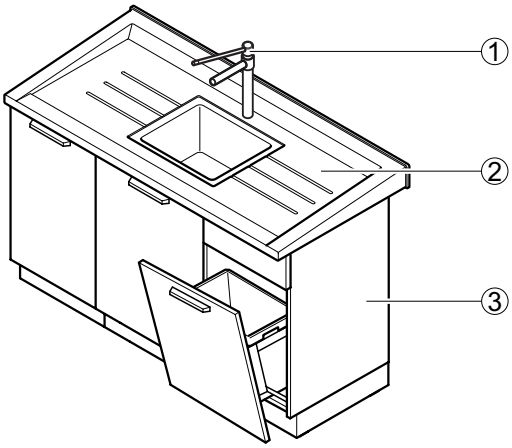

1 Outlet
2 Sink module
3 Underbench unit (3-piece)

Variants

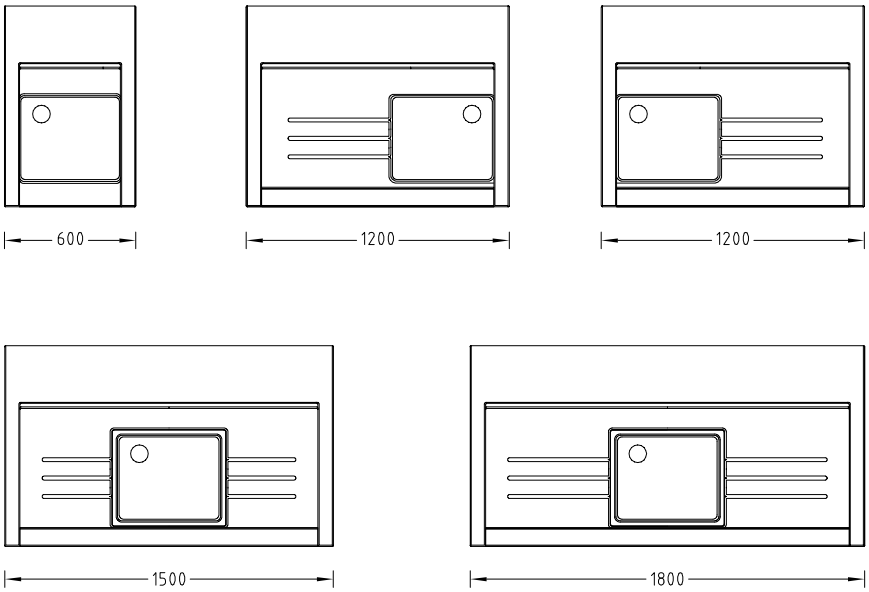

Laboratory sinks
Laboratory sink module

Technical data

Dimensions				
Width, sink module [mm]	600	1200	1500	1800
Depth, sink module for wall bench with service spine [mm]	675 or 825			
Depth, sink module for double bench with service spine [mm]	705 or 855			
Depth, sink module in front of building wall [mm]	760 or 910			
Depth, sink module as an end sink [mm]	–		740	
Overall height, sink module with underbench unit [mm]	910 front to 950 rear			
Sink dimensions, width x depth x height [mm]	460 x 390 x 250			
Height, edge of sink [mm]	20 front to 50 rear			

Material	
Sink module	Stoneware

Design characteristics	
Construction	Self-supporting moulded draining area Surrounding increased edge
Modular design	Different underbench units possible As end sink with special underbench unit

Sanitary technology	
Water connection	Permanent connection
Waste water connection	Permanent connection with siphon
Water fitting (tap)	Bench-mounted service outlets as an option
Eye shower	Optional

Intended use

- Water supply and disposal
- For cleaning operating equipment
- Sink module underneath water fittings to take up small amounts of water
- Not suitable for the disposal of chemicals

Design

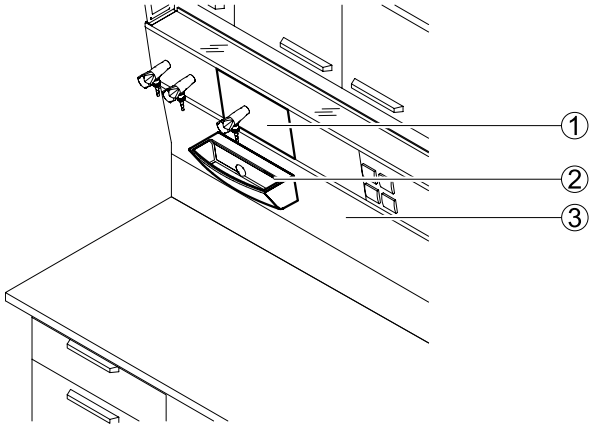

1 *Service panel with corner valves*
2 *Sink module*
3 *Fascia panel for service spine*

Technical data

Dimensions	
Width [mm]	294
Depth [mm]	132
Height [mm]	112
Internal sink dimensions width x depth x height [mm]	Approx. 270 x 85 x 80

Material	
Sink module	Stoneware Polypropylene

Design characteristics	
Construction	Attached to the fascia panel of the service spine

Sanitary technology	
Water connection	Permanent connection
Waste water connection	Permanent connection with siphon
Water fitting (tap)	Cell outlets as an option

Laboratory sinks
Drip cup in worktop

Intended use

- Water supply and disposal
- For cleaning operating equipment
- Drip cup underneath water fittings to take up small amounts of water
- Not suitable for the disposal of chemicals

Design

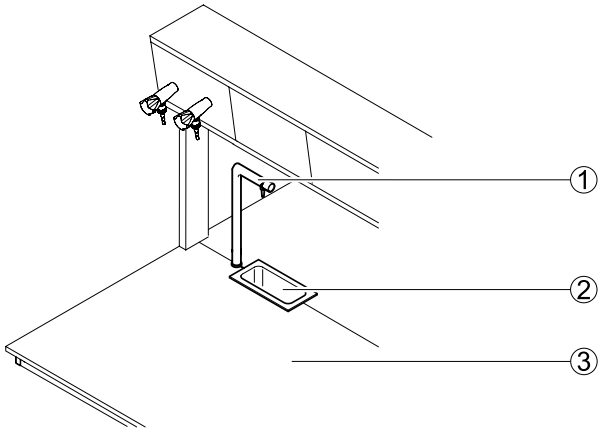

1 Outlet
2 Drip cup
3 Worktop

Technical data

Dimensions	
Width x depth [mm]	295 x 145
Height [mm]	Approx. 125 to 140 depending on material
Internal sink dimensions width x depth x height [mm]	Approx. 250 x 100 x 150

Material, drip cup	Material, worktop
Stoneware	Stoneware, composite worktop
Polypropylene	Polypropylene, melamine resin facing, solid grade laminate, Trespa Toplab+
Stainless steel	Stainless steel, melamine resin facing, solid grade laminate, Trespa Toplab+
Epoxy	Epoxy

Design characteristics	
Construction	Installed in the worktop from the top or bottom

Sanitary technology	
Water connection	Permanent connection
Waste water connection	Permanent connection with siphon
Water fitting (tap)	Bench-mounted service outlets as an option

Intended use

- Mobile water and gas supply and disposal
- For cleaning operating equipment at any location
- Not suitable for the disposal of chemicals

Design

1 *Connecting pipes*
2 *Fitting with two cold water outlet points*
3 *Worktop*
4 *Sink*
5 *Underbench unit on castors*

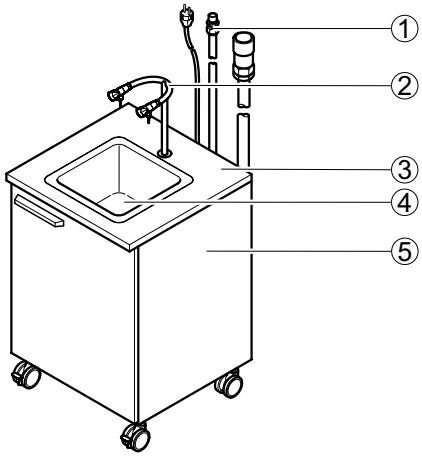

Technical data

Dimensions	
Width [mm]	605
Depth [mm]	600
Height without outlet [mm]	900
Sink dimensions width x depth x height [mm]	320 x 320 x 200
Height, [mm] castors	110
Length, supply and drain pipes [mm]	2500
Length, connecting pipes [mm]	2500

Material	
Worktop	Particle-board with melamine resin facing
Sink	Polypropylene

Load bearing capacity	
Mobile sink [kg]	150

Design characteristics	
Construction	Mounted on underbench unit on castors with hinged door Sink installed in the worktop from above Pipes and cables routed out at the rear of the underbench unit Waste water lifting unit in the underbench unit Water supply is switched off in the case of a power failure

Electrics	
Power supply [V]	230

Sanitary technology	
Water connection	Flexible with plug connector
Waste water connection	Flexible with plug connector
Gas connection	Flexible with plug connector as an option
Water fitting (tap)	Standard outlet
Gas outlet	Standard outlet combined with water fitting as an option
Mixer tap	Additional flexible water connection as an option

Laboratory sinks
AquaEL

Intended use

- Mobile water and gas supply and disposal
- For cleaning operating equipment at the workplace at any mobile or stationary laboratory workstation
- Not suitable for the disposal of chemicals

Design

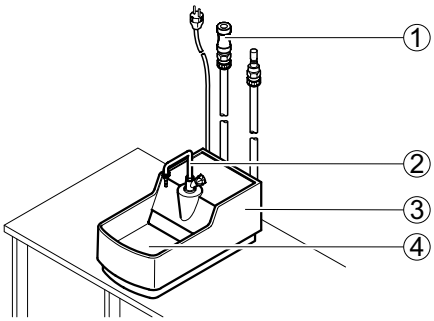

1 *Connecting pipes*
2 *Outlet with water outlet point*
3 *Housing with pump*
4 *Sink*

Technical data

Dimensions	
Width x depth x height (without outlet) [mm]	317 x 585 x 268
Sink, width x depth x height [mm]	260 x 275 x 105
Length, supply and drain pipes [mm]	1500
Length, connecting pipes [mm]	1500

Weight	
Weight without outlet [kg]	14

Material	
Material	GFK varnished

Design characteristics	
Construction	Compact system with flexible pipes and cables ready for connection Waste water lifting unit integrated in the housing Water supply is switched off in the case of a power failure

Electrics	
Power supply [V]	230

Sanitary technology	
Water connection	Flexible with plug connector
Waste water connection	Flexible with plug connector
Gas connection	Flexible with plug connector as an option
Water fitting (tap)	Standard outlet
Gas outlet	Standard outlet combined with water fitting as an option
Mixer tap	Additional flexible water connection as an option

Add-on table for low level fume cupboards

Intended use

- For adding to low level fume cupboards
- Bench frame with worktop made of various materials as a work surface and storage area for laboratory work
- Supporting construction for analytical equipment and superstructures

Design

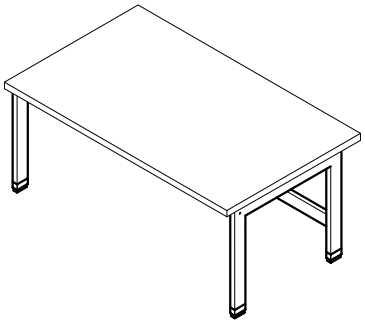

Technical data

Dimensions					
Width [mm]	900	1200	1500	1800	2100
Depth [mm]	600				
Working height [mm]	500				

Material	
Bench frame	Steel profile 60/25/2 mm
Worktop	Depending on requirement
Height-adjustable feet	Plastic housing with steel spindle

Load bearing capacity	
H-frame [kg]	200

Design characteristics	
Worktop	Surrounding increased edge
Height-adjustable feet	Individually adjustable

Special tables
Balance table

Intended use

- For setting up analytical balances and other sensitive measuring equipment
- Bench frame with worktop and specially mounted, vibration-free plate

Design

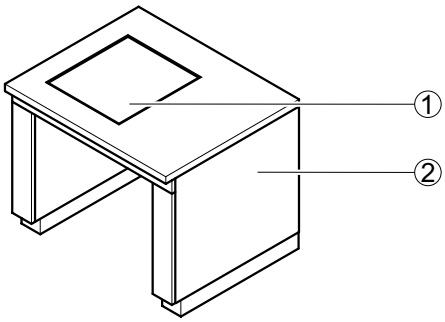

1 *Balance plate made of fine concrete*
2 *Table cover*

Technical data

Dimensions	
Width [mm]	900
Depth [mm]	750 900
Working height [mm]	750
Width x depth [mm] balance plate	400 x 450

Material	
Supporting construction	Steel profile
Worktop	Depending on requirement
Balance plate	Fine concrete

Weight	
Total weight [kg]	120
Balance plate [kg]	65

Design characteristics	
Construction	Specially mounted, heavy balance plate made of fine concrete Supporting construction with balance plate, vibration-decoupled

Intended use

- Mobile flexible storage area
- Can be used with the 600 mm deep shelf as a mobile workplace for desk work
- Not suitable for laboratory work where hazardous substances must be extracted
- Not suitable for storing hazardous substances

Design

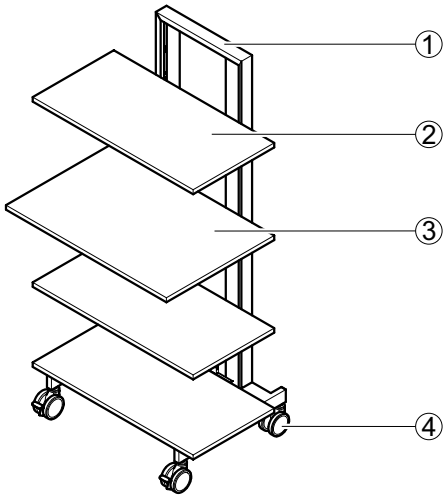

1 Steel support frame with grid
2 Shelf, depth 450 mm
3 Shelf, depth 600 mm
4 Heavy load castors with brakes

Technical data

Dimensions	
Width [mm] with shelf	900
Depth [mm] with shelf depth 450 mm	600
Height [mm]	1790
Depth, shelf [mm]	450 600

Material	
Supporting construction	Steel profile
Shelf 22 mm	Shelf of OSB board

Load bearing capacity	
Total [kg]	150
Shelf [kg]	20

Design characteristics	
Heavy load castors	4, of which 2 can be locked (castor and steering axle can be locked)
Shelf	Can be adjusted without tools with a pitch of 150 mm
Integrated distribution pillar	Optional

Special tables
Swing

Intended use

- Bench frame with worktop made of various materials as a work surface and storage area for laboratory work
- Supporting construction for analytical equipment and superstructures
- Visually appealing connection of laboratory benches of different depths

Design

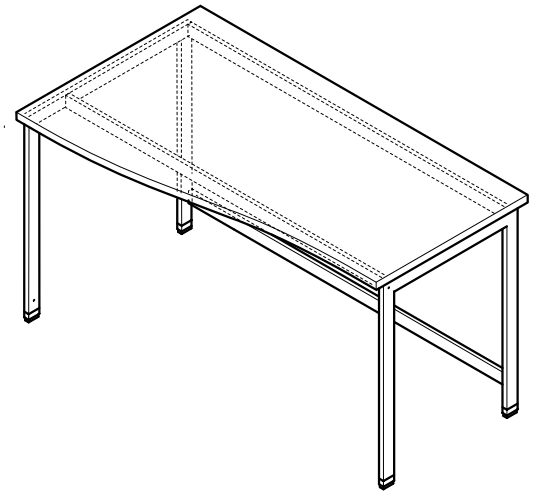

Technical data

Dimensions		
Width [mm]	1200	1500
Depth [mm]	600 – 750 750 – 900	
Working height [mm]	750 900	

Material	
Bench frame	Steel profile 60/25/2 mm
Worktop	Depending on requirement
Height-adjustable feet	Plastic housing with steel spindle

Load bearing capacity	
Total [kg]	200

Intended use

- Bench frame with worktop made of various materials as a height-adjustable work surface and storage area for laboratory work
- Supporting construction for analytical equipment and superstructures

Design

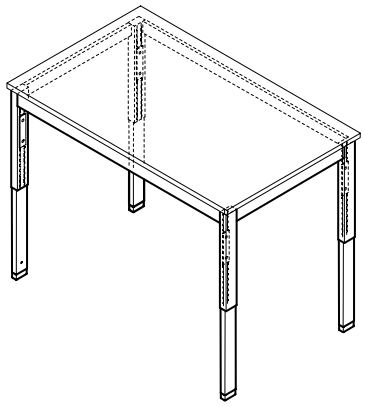

Technical data

Dimensions		
Width [mm]	1200	1500
Depth [mm]	600 750 900	
Working height [mm]	700 – 950	

Material	
Bench frame	Steel profile 60/25/2 mm
Worktop	Depending on requirement
Height-adjustable feet	Plastic housing with steel spindle

Load bearing capacity	
Total [kg]	200

Design characteristics	
Working height	Can be adjusted with a grid of 25 mm
Bench frame	H-frame

Special tables
Round table

Intended use

- For adding to benches with H-frames and C-frames as an additional work surface

Design

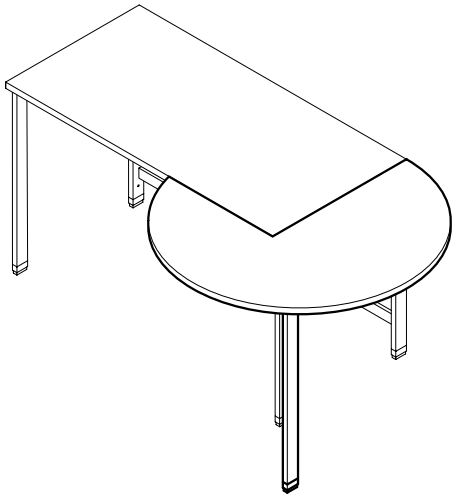

Technical data

Dimensions	
Diameter [mm]	1200
Working height [mm]	750 900

Material	
Bench frame	Steel profile 60/25/2 mm
Worktop	Depending on requirement
Height-adjustable feet	Plastic housing with steel spindle

Load bearing capacity	
Round table [kg]	50

Sliding element Sekretär

Intended use

- Inclined desk that can be moved on a laboratory work bench

Design

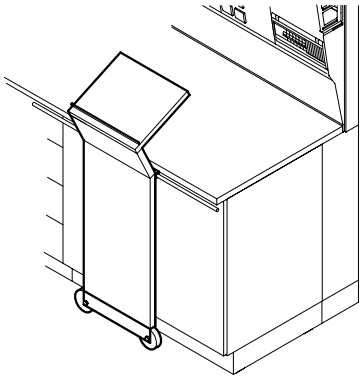

Technical data

Dimensions	
Width [mm]	406
Working height, bench [mm]	900
Overall height [mm]	1256

Design characteristics	
Construction	Sliding element on 2 wheels Fastened to a sliding rail on the laboratory work bench

Material	
Sliding element	Particle-board with melamine resin facing in walnut veneer

Special tables
Sliding element Assistent

Intended use

- Fold-out storage area and desk that can be moved on a laboratory work bench

Design

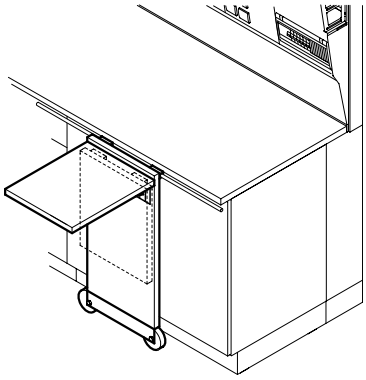

Technical data

Dimensions	
Width [mm]	406
Depth [mm]	530
Working height, bench [mm]	900

Load bearing capacity	
Storage area and desk [kg]	10

Design characteristics	
Construction	Sliding element on 2 wheels Fastened to a sliding rail on the laboratory work bench Can be folded down completely

Material	
Sliding element	Particle-board with melamine resin facing in walnut veneer

Intended use

- Protection from splashes and splinters that can be moved on a laboratory work bench

Design

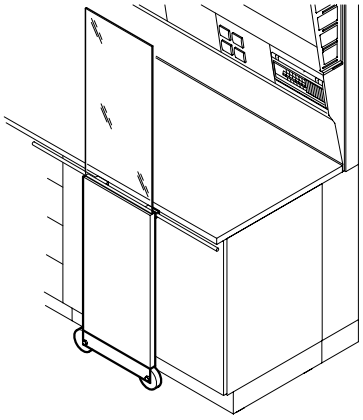

Technical data

Dimensions	
Width [mm]	406
Working height, bench [mm]	900
Overall height [mm]	1780

Design characteristics	
Construction	Sliding element on 2 wheels Fastened to a sliding rail on the laboratory work bench

Material	
Sliding element	Particle-board with melamine resin facing in walnut veneer
Splash protection	Safety glass

4 Storage cupboards

Our ***SCALA*** laboratory furniture system provides a vast selection of storage variants for fast access and safe storage.

All storage cupboards can be variably equipped and provide optimum space utilisation in all areas of the laboratory.

Designed with a high quality appearance and manufactured to Waldner's high quality requirements.

The laboratory cabinets can be expanded, upgraded and, of course, are compatible – for straightforward adaptation to new requirements.

We place maximum value on durability. Even after thousands of load changes, hinges, pull-out rails and surfaces must not weaken. First-class materials which are carefully processed are sure to guarantee long durability.

Apart from laboratory cabinets, suspended cabinets, top-mounted cabinets, underbench units and pull-out cabinets, we have special cabinets for the safe storage of typical laboratory items such as solvents, acids, alkalis and gas cylinders as well as for the disposal of chemicals.

Underbench units **138**
Underbench unit on plinth 138
Underbench unit on castors 140
Suspended underbench unit 142
Self-supporting underbench unit for fume cupboards 144
Push-in underbench unit for fume cupboards 147
Underbench unit for sinks 148

Overbench cabinets **151**

Laboratory cabinets **153**
Laboratory cabinet 153
Emergency cabinet 157

Top-mounted cabinets **158**

Pull-out cabinets **159**

Special cabinets **161**
Laboratory cabinet for storing acids and alkalis 161
Underbench safety unit for fume cupboards for storing acids and alkalis 163
FWF 90 underbench safety unit for fume cupboards for storing flammable liquids 165
FWF 90 safety cabinet for storing flammable liquids 167
G 90 gas cylinder cabinet 169

4 Storage cupboards

Large number of variants

For maximum flexibility in the laboratory, we offer a large variety of cabinet and underbench unit variants. Push-in underbench units, either movable or on plinth, easily fit under C-frame, H-frame and cantilever frames, or under fume cupboards with their own supporting structure.

Suspended underbench units are integrated directly under the worktop or as movable variants in cantilever frames.

Design and function go together

The aluminium die-cast handles without joints are resistant to chemicals and easy to clean. Special highlights in laboratory design can be set by using walnut veneer fronts. Our overbench cabinets are fastened to the service spine or wall without a visible gap.

More mobility in the laboratory

Equipped with four smooth running swivelling castors – two of which can be locked – our movable underbench units can be simply pushed into the support frame of add-on tables or laboratory benches. The castor height is also harmonised and flush with the plinth height of our fixed cabinets.

More safety details

Due to the self-locking protection and change-pull-out catch of the drawers, our movable underbench units will not tilt over. Our top-mounted cabinets are fitted with a rail on the inside for safely securing a ladder.

More usable storage space

With a depth of 550 mm for the underbench units and 500 mm drawer depth, the storage space is used to full capacity. The best solution offered in the market. We have also expanded the usable storage space of corner cabinets by implementing new fittings.

Surfaces and edges are optimally protected

The melamine resin coated surfaces are easy to clean and robust against the effects in the laboratory. The front edges on the carcass and on the shelves are equipped with impact-resistant 2 mm polypropylene edges. Furthermore, the foil-coated plinths for our furniture are made of water-proof bonded coated lumber-core plywood board.

Optimal positioning

Due to four height-adjustable feet, our laboratory cabinets and underbench units on plinth can be set up straight and steady.

Fully extensible drawers with hidden roller rails

The double-wall steel frame with hidden roller rails is more robust, protected against soiling and thus runs a lot easier than single wall frames with open roll rails. Our standard fully-extensible drawers ensure a clear overview of their contents. Soft-closing on request.

Safety for problematic substances

Our safety cabinets for gases, acids, alkalis and flammable liquids meet the highest requirements on material properties and function. Of course the cabinets comply with the current standards.

Underbench units
Underbench unit on plinth

Intended use
- For storing equipment and chemicals in acc. with EN 14727
- For working heights of 750 mm and 900 mm
- Not suitable for storing flammable liquids, gas cylinders and self-igniting or self-decomposing substances
- Not suitable for storing acids and alkalis

Design

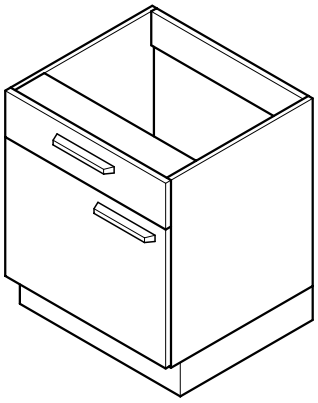

Variants

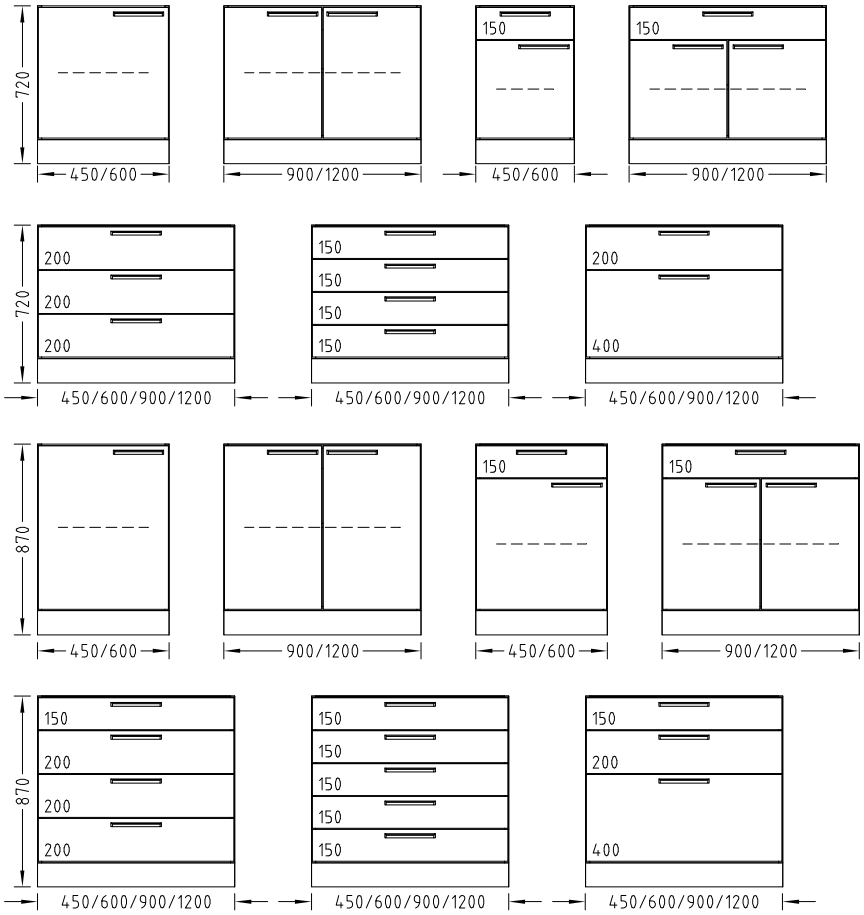

Technical data

Dimensions				
Width [mm]	450	600	900	1200
Depth [mm]	550			
Overall height [mm]	720 870			
Height, drawers [mm]	150 200 400 Combination possibilities see variants			
Height, plinth [mm]	110			

Load bearing capacity	
Per shelf/drawer [kg]	30

Design characteristics	
Construction	For working height 750 and 900 mm Hinged doors with 270° hinges Drawers, fully extensible Open at the top, rear panel can be removed Shelf, height-adjustable Without doors as a rack 4 height-adjustable feet
Combination possibilities	See variants
Handle	Sash handle made of aluminium die-cast U handle, stainless steel
Drawers with change-pull-out catch	Optional
Full-height drawers	Optional
Soft stop for drawer	Optional
Extract air spigot	Optional
Closing	Optional

Underbench units
Underbench unit on castors

Intended use
- For storing equipment and chemicals flexibly in acc. with EN 14727
- For working heights of 750 mm and 900 mm
- Not suitable for storing flammable liquids, gas cylinders and self-igniting or self-decomposing substances
- Not suitable for storing acids and alkalis

Design

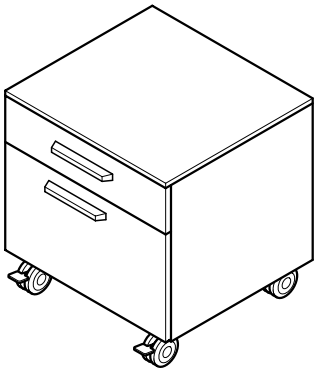

Variants

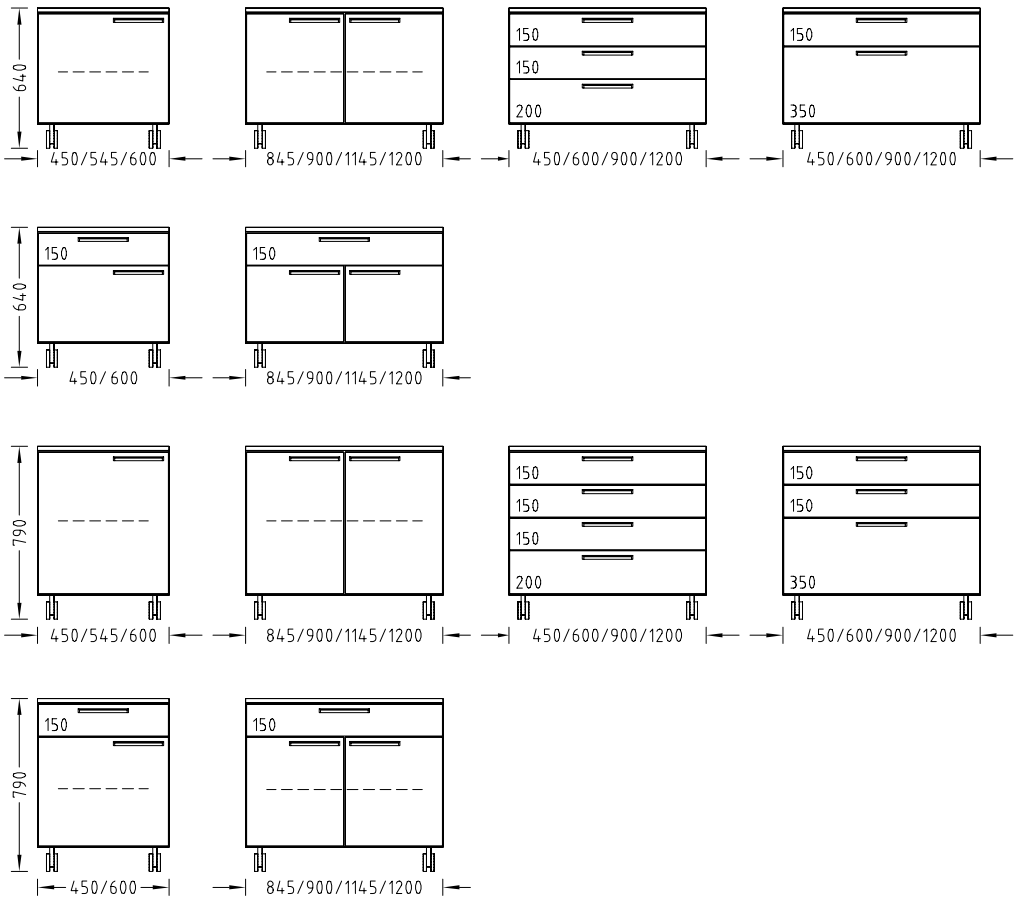

Technical data

Dimensions							
Width [mm]	450	545	600	845	900	1145	1200
Depth [mm]	550						
Overall height [mm]	640 790						
Height, drawers [mm]	150 200 350 Combination possibilities see variants						
Height, castors [mm]	110						

Load bearing capacity	
Per shelf/drawer [kg]	30
Per castor [kg]	70

Design characteristics	
Construction	For working height 750 and 900 mm Hinged doors with 270° hinges Drawers, fully extensible and with change-pull-out catch Shelf, height-adjustable Without doors as a rack Covered at the top, rear panel permanently connected with the carcass 4 swivelling castors, front castors can be locked
Combination possibilities	See variants
Handle	Sash handle made of aluminium die-cast U handle, stainless steel
Soft stop for drawer	Optional
Closing	Optional

Underbench units
Suspended underbench unit

Intended use
- For storing equipment and chemicals flexibly in acc. with EN 14727
- For working heights of 750 mm and 900 mm
- Not suitable for storing flammable liquids, gas cylinders and self-igniting or self-decomposing substances
- Not suitable for storing acids and alkalis

Design

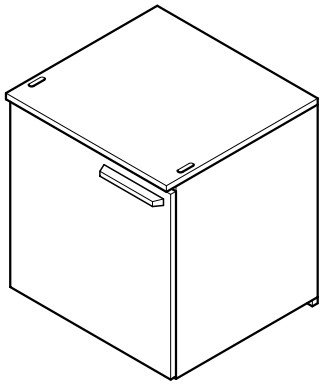

Variants

Technical data

Dimensions							
Width [mm]	450	545	600	845	900	1145	1200
Depth [mm]	500 (depth of frame 572) 550 (depth of frame 722)						
Height [mm]	380 530						
Height, drawers [mm]	150 200 350 Combination possibilities see variants						

Load bearing capacity	
Per shelf/drawer [kg]	30

Design characteristics	
Construction	For working height 750 and 900 mm 2 fittings for attaching to the profile rail of the bench frame Hinged doors with 270° hinges Drawers, fully extensible Covered at the top, rear panel permanently connected with the carcass Shelf, height-adjustable For C-frame/cantilever bench frame: Can be moved to the sides until it protrudes over the bench grid Hinged doors with 1 shelf at a height of 530 mm At a height of 530 mm without doors as a rack with 1 shelf
Combination possibilities	See variants
Handle	Sash handle made of aluminium die-cast U handle, stainless steel
Drawers with change-pull-out catch	Optional
Soft stop for drawer	Optional
Closing	Optional

Underbench units
Self-supporting underbench unit for fume cupboards

Intended use

- For storing equipment and chemicals in acc. with EN 14727
- For fume cupboards with rear panel installation and for fume cupboards with side installation
- Not suitable for storing flammable liquids, gas cylinders and self-igniting or self-decomposing substances
- Not suitable for storing acids and alkalis

Design

For fume cupboards with rear panel installation

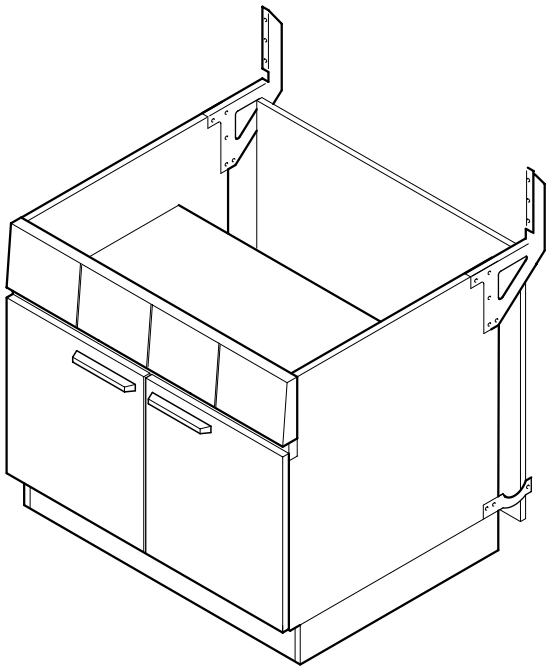

For fume cupboards with side installation

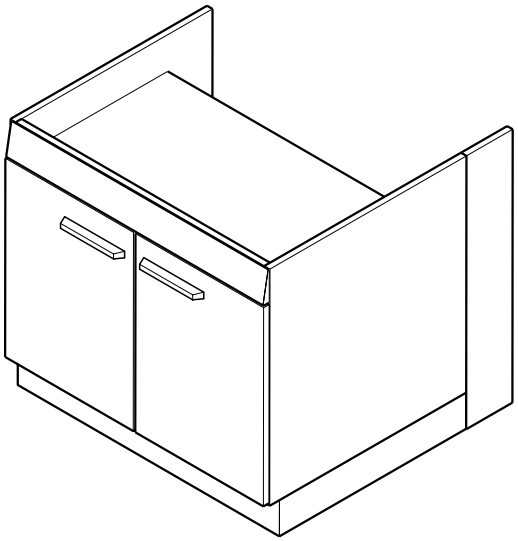

Underbench units
Self-supporting underbench unit for fume cupboards

Variants

For fume cupboards with rear panel installation

For fume cupboards with side installation

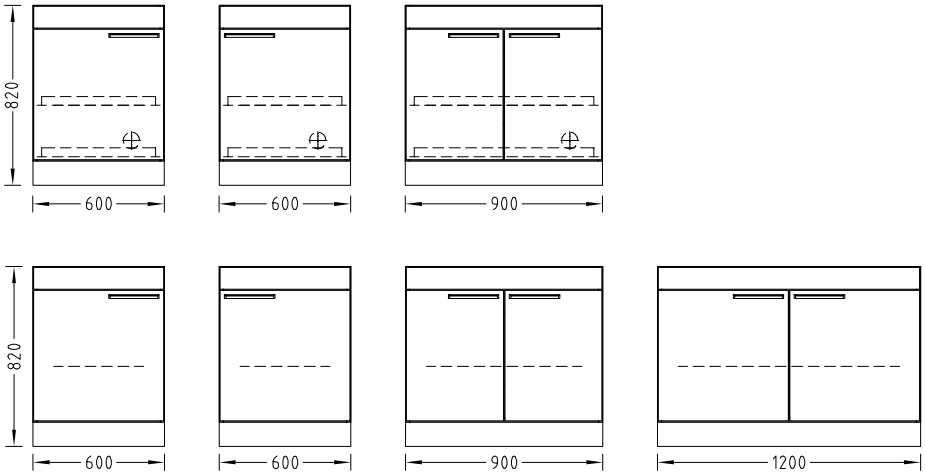

Underbench units
Self-supporting underbench unit for fume cupboards

Technical data

Dimensions			
Width [mm]	600	900	1200
Depth [mm]	550		
Overall height [mm]	820		
Height, plinth [mm]	110		

Load bearing capacity	
Per shelf [kg]	30

Design characteristics	
Construction	Hinged doors with 270° hinges Service panel above the storage cupboard for fume cupboards with rear panel installation Closed at the top, rear panel can be removed Shelf, height-adjustable 4 height-adjustable feet
Combination possibilities	See variants
Full-height drawers	Optional
Extract air spigot	Optional
Underbench exhaust	Optional
Acid and alkali equipment	Optional
Closing	Optional
Handle	Sash handle made of aluminium die-cast U handle, stainless steel

Push-in underbench unit for fume cupboards

Intended use

- For storing equipment and chemicals in acc. with EN 14727
- For fume cupboards with rear panel installation and for fume cupboards with side installation on a steel support frame
- Not permitted for storing flammable liquids, gas cylinders and self-igniting or self-decomposing substances
- Not permitted for storing acids and alkalis

Design

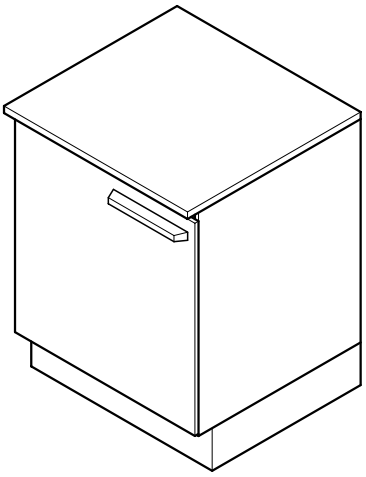

Variants

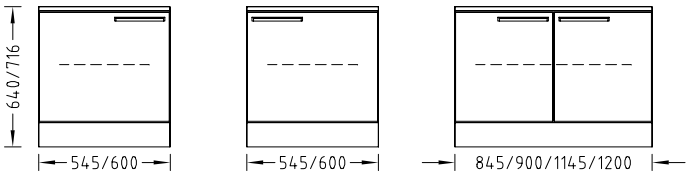

Technical data

Dimensions						
Width [mm]	545	600	845	900	1145	1200
Depth [mm]	550					
Overall height [mm], push-in underbench unit for bench-mounted fume cupboards with rear panel installation	640					
Overall height [mm], push-in underbench unit for bench-mounted fume cupboards with side installation	716					
Height, plinth [mm]	110					

Load bearing capacity	
Per shelf [kg]	30

Design characteristics	
Construction	Hinged doors with 270° hinges Closed at the top, rear panel can be removed Shelf, height-adjustable 4 height-adjustable feet
Combination possibilities	See variants
Handle	Sash handle made of aluminium die-cast U handle, stainless steel
Full-height drawers	Optional
Extract air spigot	Optional
Underbench exhaust	Optional
Closing	Optional

Underbench units
Underbench unit for sinks

Intended use
- As an underbench unit for sinks for storing equipment and chemicals in acc. with EN 14727
- Not suitable for storing flammable liquids, gas cylinders and self-igniting or self-decomposing substances
- Not suitable for storing acids and alkalis

Design

Sink with underbench unit for service spines or wall benches

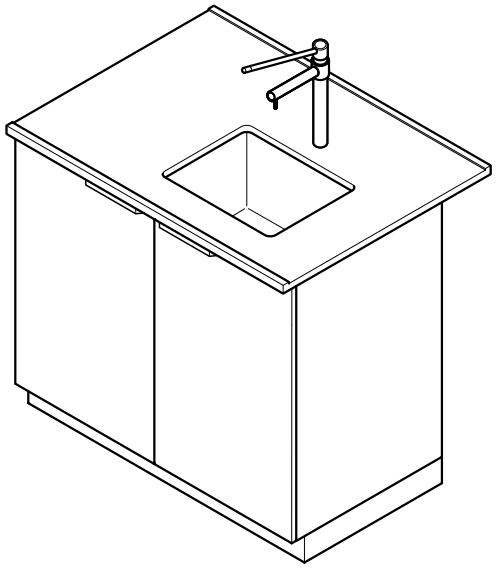

End sink for double benches

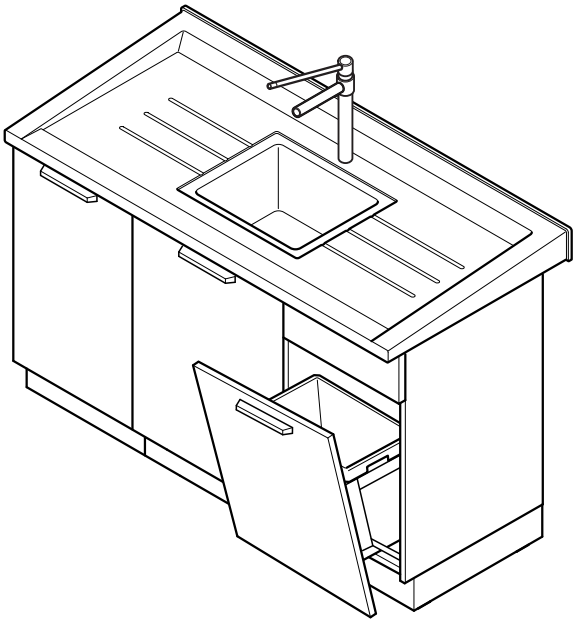

Variants

Sink with underbench unit for service spines or wall benches

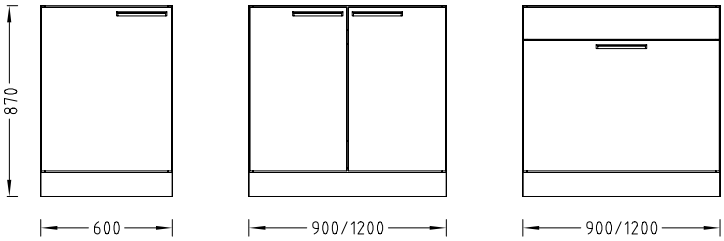

End sink for double benches

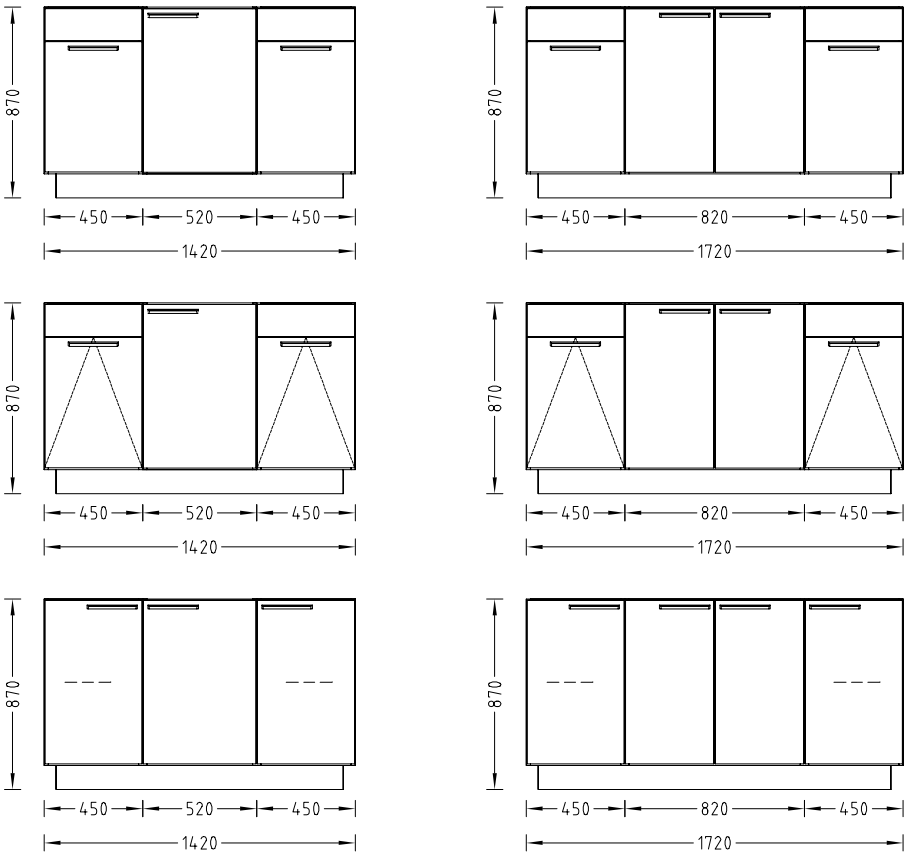

Underbench units
Underbench unit for sinks

Technical data

Dimensions					
Width [mm]	600 [1]	900 [1]	1200 [1]	1420 [2]	1720 [2]
Depth [mm]	550			700	
Overall height [mm]	870				
Height, plinth [mm]	110				

[1] For sinks on service spines or wall benches

[2] For end sinks

Load bearing capacity	
Per shelf/drawer [kg]	30

Design characteristics	
Construction	Hinged doors with 270° hinges Shelf, height-adjustable 4 height-adjustable feet Inclined tilting door with waste bin Hinged doors, full-height drawer or tilting door Combination possibilities see variants
Handle	Sash handle made of aluminium die-cast U handle, stainless steel
Closing	Optional

Intended use

- For storing equipment and chemicals in acc. with EN 14727
- Not permitted for storing flammable liquids, gas cylinders and self-igniting or self-decomposing substances
- Not permitted for storing acids and alkalis

Design

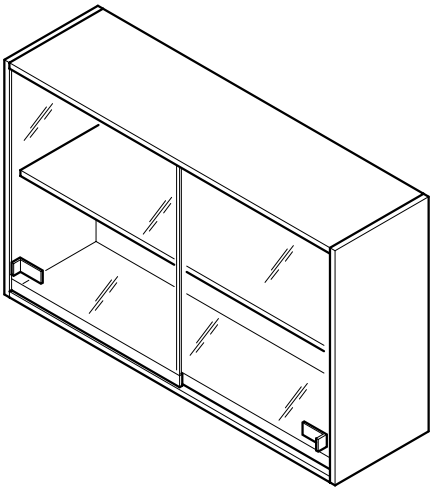

Variants

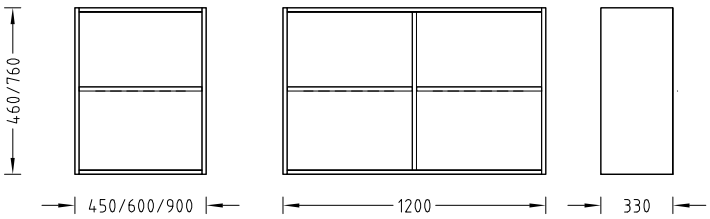

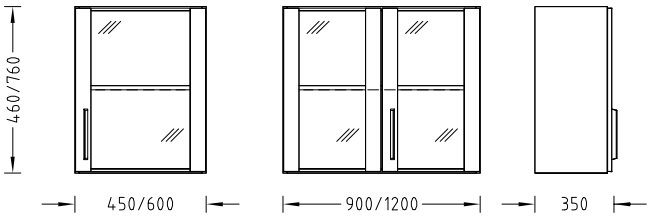

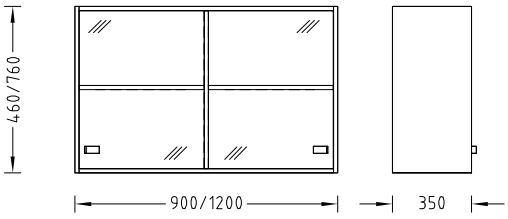

Overbench cabinets
Overbench cabinet

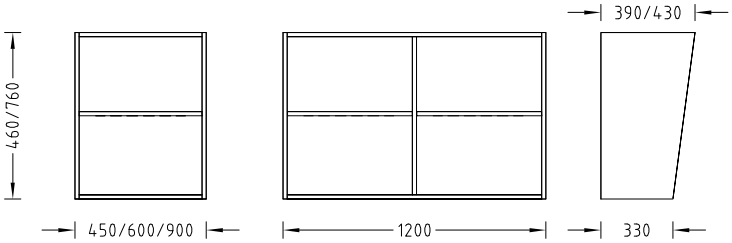

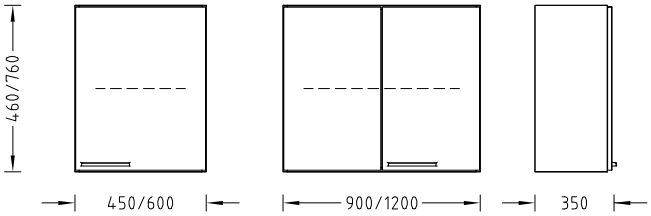

Technical data

Dimensions				
Width [mm]	450	600	900	1200
Depth [mm]	350			
Height [mm]	460 760			

Load bearing capacity	
Per shelf [kg]	30
Load bearing capacity, total [kg]	60

Design characteristics	
Construction	Height-adjustable fitting for fastening to the wall or to the service spine For a width of 1200 mm with central panel Shelf, height-adjustable
Combination possibilities	See variants
Handle	Sash handle made of aluminium die-cast U handle, stainless steel Glass sliding door with affixed plastic handle
Rack with inclined side walls	Optional
Closing	Optional

Intended use

- For storing equipment and chemicals in acc. with EN 14727
- Not permitted for storing flammable liquids, gas cylinders and self-igniting or self-decomposing substances
- Not permitted for storing acids and alkalis

Design

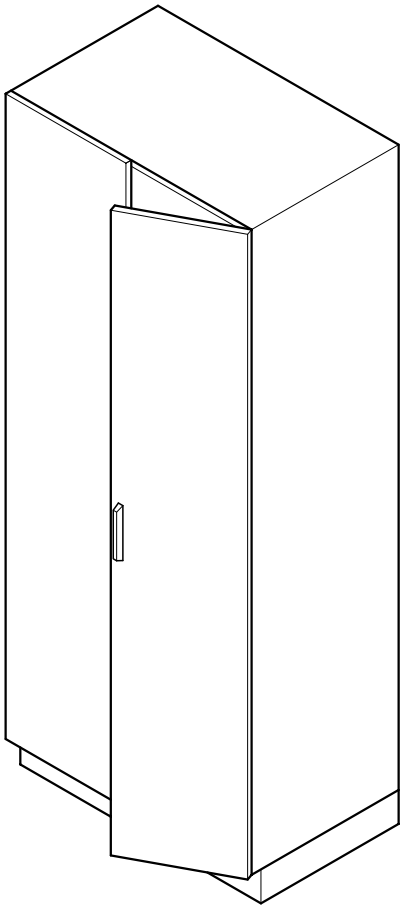

Laboratory cabinets
Laboratory cabinet

Variants

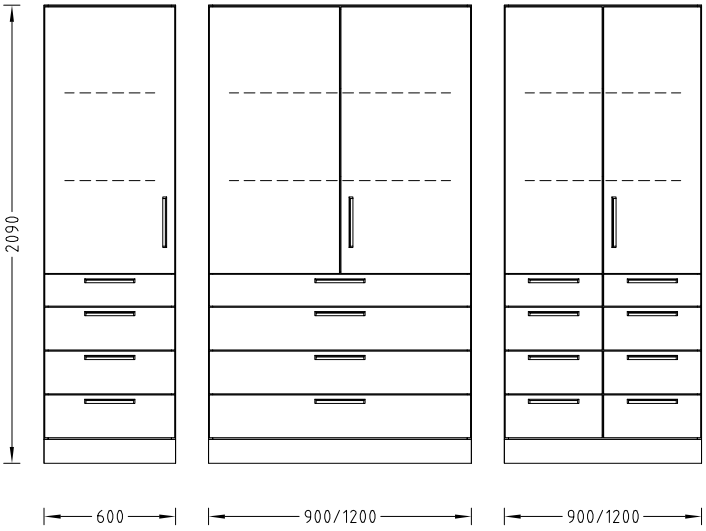

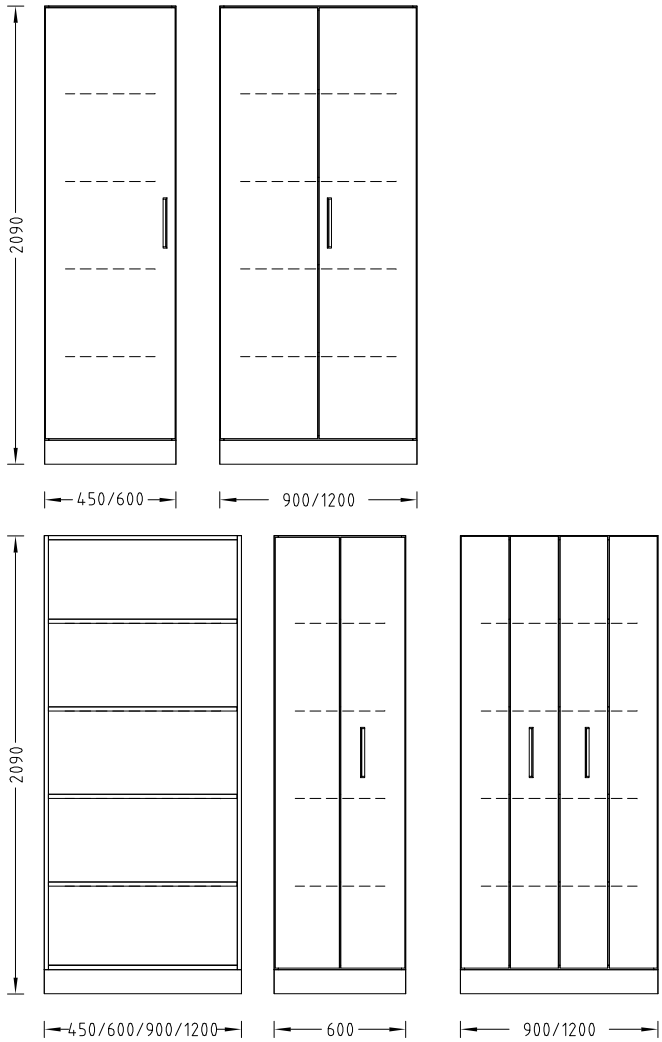
2090
450/600
900/1200
2090
450/600/900/1200
600
900/1200

Laboratory cabinets
Laboratory cabinet

Technical data

Dimensions				
Width [mm]	450	600	900	1200
Depth [mm]	350 550			
Overall height [mm]	2090			
Height, plinth [mm]	110			

Load bearing capacity	
Per shelf [kg]	30

Design characteristics	
Construction	Hinged doors with 270° hinges Shelves, height-adjustable Drawers, fully extensible 4 height-adjustable feet
Combination possibilities	See variants Drawers only with a depth of 550 mm
Handle	Sash handle made of aluminium die-cast U handle, stainless steel
Shelves, extendable	Optional (with a cabinet depth of 550 mm)
Drawers	Optional (with a cabinet depth of 550 mm)
Soft stop for drawer	Optional
Extract air spigot	Optional
Closing	Optional

Intended use

- For storing protection and rescue materials (fire extinguisher, first aid case, etc.)
- Not permitted for storing flammable liquids, gas cylinders and self-igniting or self-decomposing substances
- Not permitted for storing acids and alkalis

Design

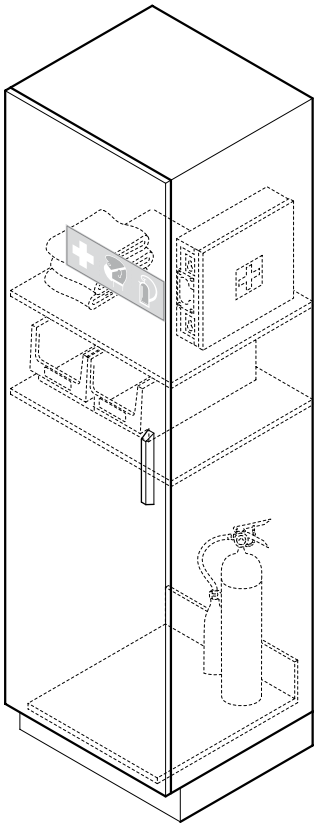

Technical data

Dimensions	
Width [mm]	600
Depth [mm]	350 550
Overall height [mm]	2090
Height, plinth [mm]	110

Design characteristics	
Construction	Hinged door with 270° hinges 4 shelves, height-adjustable 4 height-adjustable feet
Equipment	First aid case Fire extinguisher, 5 kg Sand boxes Shovel Fire blankets

Top-mounted cabinets
Top-mounted cabinet

Intended use

- For storing equipment and chemicals in acc. with EN 14727
- Only suitable as a permanently installed top part on the following Waldner cabinets: Laboratory cabinet, pull-out cabinet, emergency cabinet and acids and alkalis cabinet
- Not permitted for storing flammable liquids, gas cylinders and self-igniting or self-decomposing substances
- Not permitted for storing acids and alkalis

Design

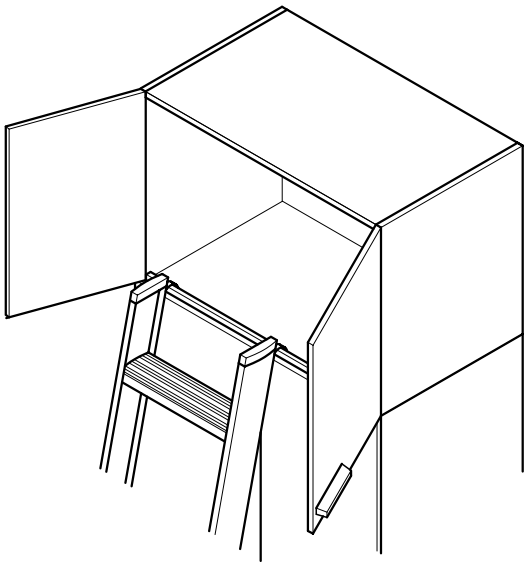

Technical data

Dimensions				
Width [mm]	450	600	900	1200
Depth [mm]	350 550			
Height [mm]	610 760			

Load bearing capacity	
Per shelf [kg]	30

Design characteristics	
Construction	With integrated rail for securing a ladder For laboratory cabinets with or without extract air spigot 1 shelf, height-adjustable Hinged doors
Handle	Sash handle made of aluminium die-cast U handle, stainless steel
Hook ladder	Optional
Closing	Optional

Intended use

- For storing liquid or solid substances in suitable containers in acc. with EN 14727
- Not permitted for storing flammable liquids, gas cylinders and self-igniting or self-decomposing substances
- Not permitted for storing acids and alkalis

Design

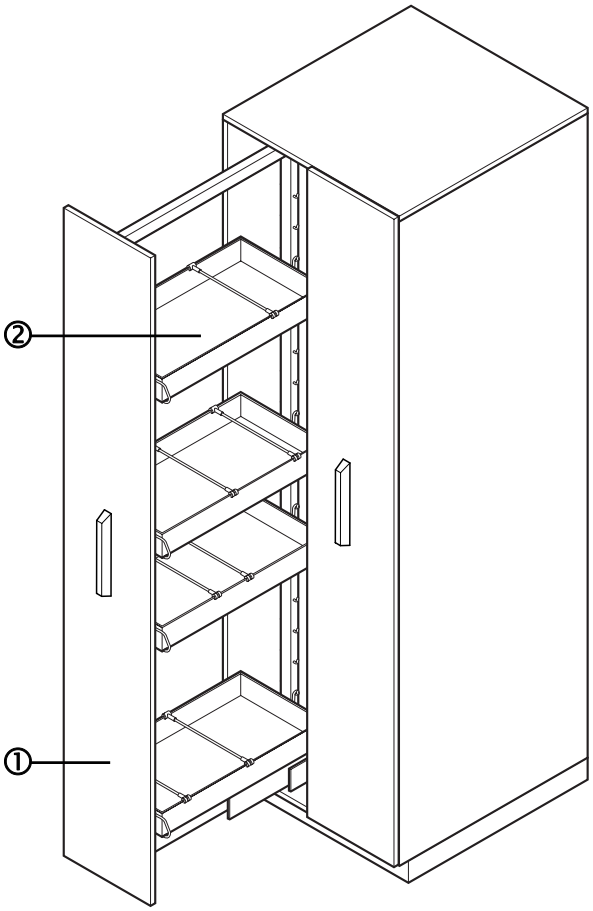

1 *Pull-out*
2 *Tray with compartment partioning*

Pull-out cabinets
Pull-out cabinet

Technical data

Dimensions		
Width [mm]	600	900
Depth [mm]	550	
Overall height [mm]	2090	
Height, plinth [mm]	110	
Tray, width x depth x height [mm]	240 x 425 x 40	

Load bearing capacity	
Per drawer [kg]	120
Per tray [kg]	10

Design characteristics	
Construction	5 trays with compartment partioning for each drawer, height-adjustable Fastened to the wall 4 height-adjustable feet Drawer doors with drawers accessible from both sides
Handle	Sash handle made of aluminium die-cast U handle, stainless steel
Soft stop for drawers	Optional
Extract air spigot	Optional
Closing	Optional

Material	
Tray	Polypropylene

Laboratory cabinet for storing acids and alkalis

Intended use

- For storing limited amounts of flammable acids and alkalis
- Not suitable for storing flammable liquids, gas cylinders and self-igniting or self-decomposing substances

Design

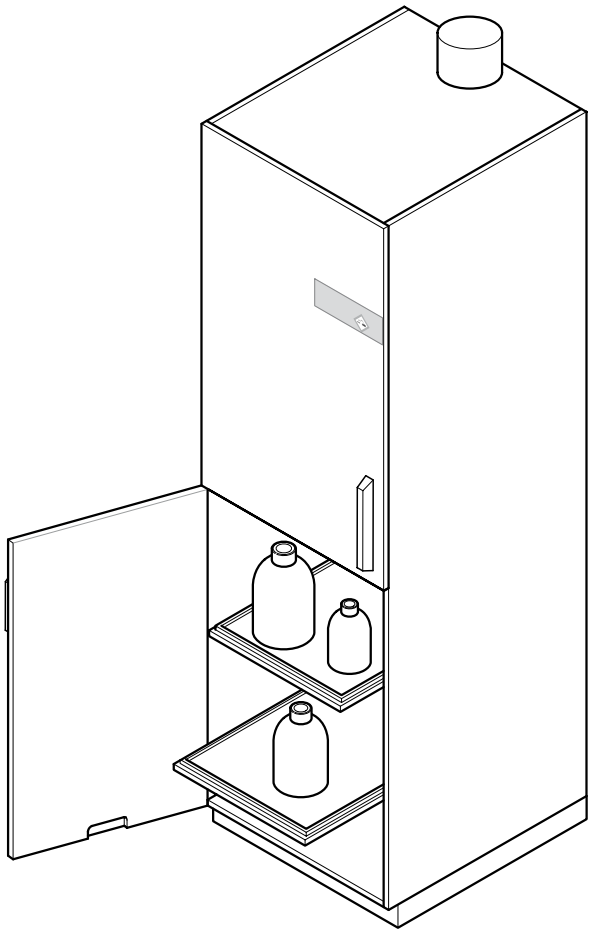

Special cabinets
Laboratory cabinet for storing acids and alkalis

Technical data

Dimensions	
Width [mm]	600
Depth [mm]	550
Overall height [mm]	2090
Height, plinth [mm]	110

Load bearing capacity	
Per shelf, height-adjustable [kg]	30
Per pull-out shelf [kg]	20

Design characteristics	
Construction	Connection to the permanently active ventilation system 4 shelves, fixed or pull-out 4 height-adjustable feet Separate compartments for acids and alkalis Trays made of polypropylene Coated fittings Hinged doors
Handle	Sash handle made of aluminium die-cast U handle, stainless steel

Ventilation data	
Air exchange rate [m³/h]	100
Ventilation connection Ø [mm]	90/110

Underbench safety unit for fume cupboards for storing acids and alkalis

Intended use

- Push-in or self-supporting underbench unit for bench-mounted fume cupboards for storing limited amounts of acids and alkalis
- Not suitable for storing flammable liquids, gas cylinders and self-igniting or self-decomposing substances

Design

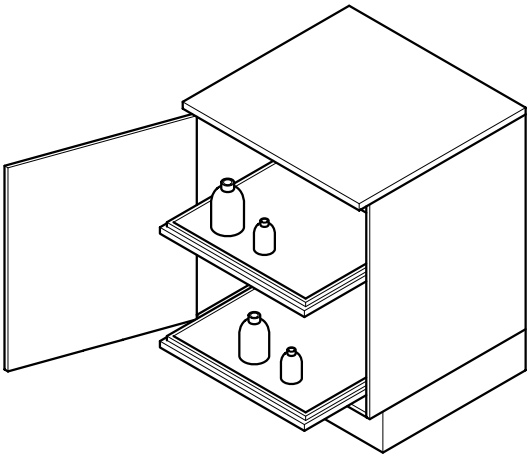

Variants

Push-in underbench units

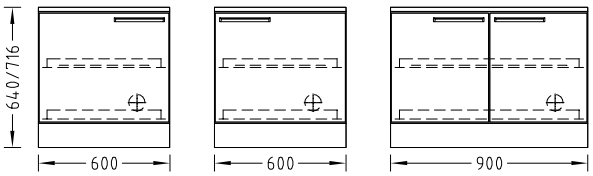

Self-supporting underbench units for fume cupboards with rear panel installation

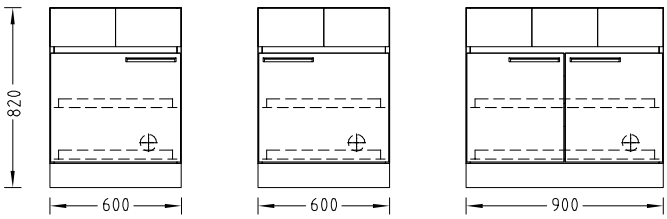

Self-supporting underbench units for fume cupboards with side installation

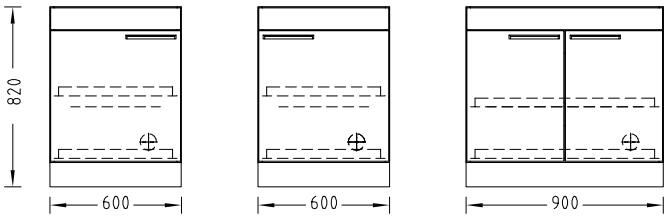

Special cabinets
Underbench safety unit for fume cupboards for storing acids and alkalis

Technical data

Dimensions		
Width [mm]	600	900
Depth [mm]	550	
Overall height [mm], push-in underbench units for bench-mounted fume cupboards with rear panel installation	640	
Overall height [mm], push-in underbench units for bench-mounted fume cupboards with side installation	716	
Overall height [mm], self-supporting underbench units for bench-mounted fume cupboards with rear panel/side installation	820	
Height, plinth [mm] push-in underbench unit	110	

Load bearing capacity	
Extendable shelf [kg]	20

Design characteristics	
Construction	Connection to the permanently active ventilation system 4 height-adjustable feet Coated fittings 2 extendable shelves with trays Hinged doors Combination possibilities see variants
Handle	Sash handle made of aluminium die-cast U handle, stainless steel

Ventilation data	
Air exchange rate [m³/h]	30
Ventilation connection to the ascending duct Ø [mm]	90

FWF 90 underbench safety unit for fume cupboards for storing flammable liquids

Intended use

- Push-in underbench unit for bench-mounted fume cupboards for storing limited amounts of flammable liquids
- Not suitable for storing gas cylinders and self-igniting or self-decomposing substances
- Not suitable for storing acids and alkalis

Design

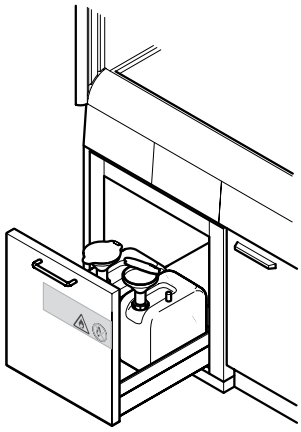

Variants

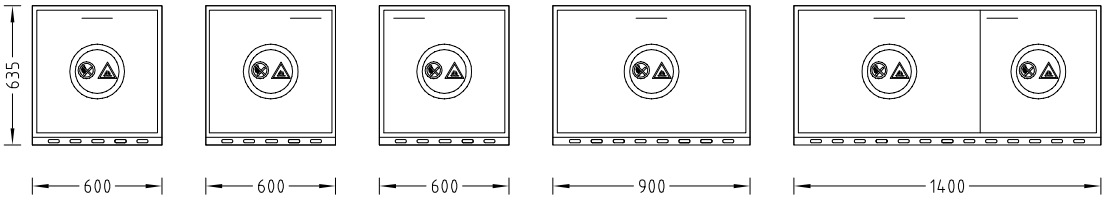

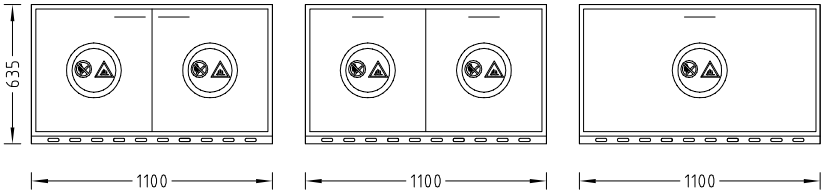

Special cabinets
FWF 90 underbench safety unit for fume cupboards for storing flammable liquids

Technical data

Dimensions				
Width [mm]	600	900	1100	1400
Depth [mm]	600			
Overall height [mm]	635			
Height, plinth [mm]	35			
Max. weight [kg]	130	170	220	290

Load bearing capacity	
Rigid shelf [kg]	30
Drawers [kg]	25

Design characteristics	
Construction	Connection to the permanently active ventilation system Connection to the earth wire with potential equalisation With closing Tray with perforated plate insert Self-closing through current-independent thermal activation in the case of fire Hinged doors Drawer
Combination possibilities	See variants
Handle	U handle, stainless steel
Additional tray pull-out	Optional for drawers
Regulations and standards	EN 14470-1 TRbF 20

Ventilation data	
Air exchange rate [m³/h]	30
Ventilation connection to the ascending duct Ø[mm]	90

Material	
Underbench unit	Powder-coated stainless steel on the outside Colour: Pure white RAL 9010
Ventilation connection	PPS

FWF 90 safety cabinet for storing flammable liquids

Intended use

- For storing limited amounts of flammable liquids
- Not suitable for storing gas cylinders and self-igniting or self-decomposing substances
- Not suitable for storing acids and alkalis

Design

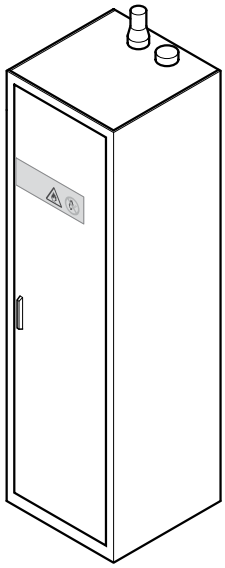

Variants

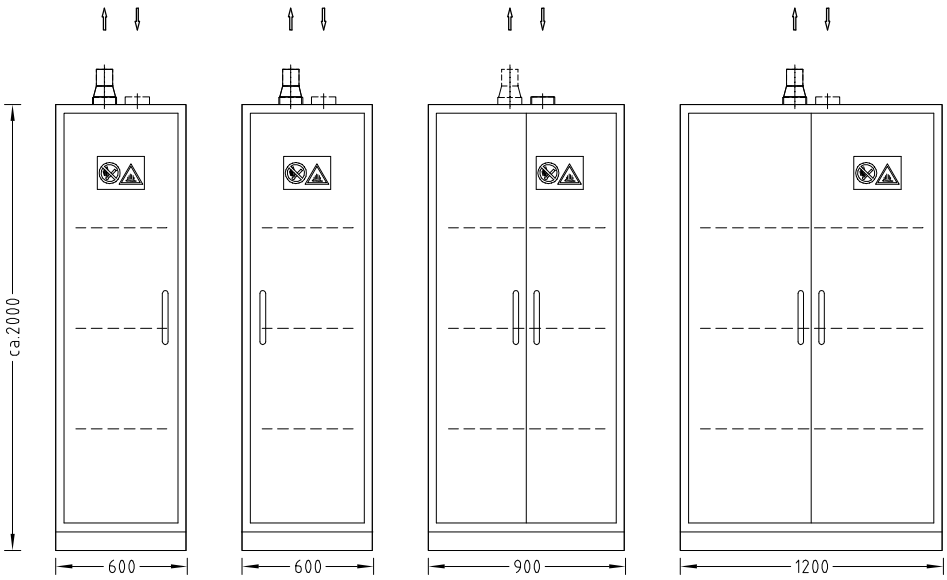

Special cabinets
FWF 90 safety cabinet for storing flammable liquids

Technical data

Dimensions			
Width [mm]	600	900	1200
Depth [mm]	Approx. 600		
Overall height [mm]	Approx. 2000		
Height, plinth [mm]	Approx. 80		
Max. weight [kg]	290	360	470

Load bearing capacity	
Basin bed [kg]	Depending on version

Design characteristics	
Construction	Connection to the permanently active ventilation system Connection to the earth wire with potential equalisation Self-closing through current-independent thermal activation in the case of fire 3 basin beds, height-adjustable Tray with perforated plate insert With closing 4 height-adjustable feet Hinged doors
Combination possibilities	See variants
Other versions and configurations	On request
Regulations and standards	EN 14470-1 TRbF 20

Ventilation data	
Air exchange rate [m³/h]	30
Ventilation connection Ø [mm]	75

Material	
Laboratory cabinet	Powder-coated stainless steel on the outside Colour: Pure white RAL 9010
Ventilation connection	Galvanised steel

G 90 gas cylinder cabinet

Intended use

- For storing gas cylinders in buildings
- Not suitable for storing flammable liquids and self-igniting or self-decomposing substances
- Not suitable for storing acids and alkalis

Design

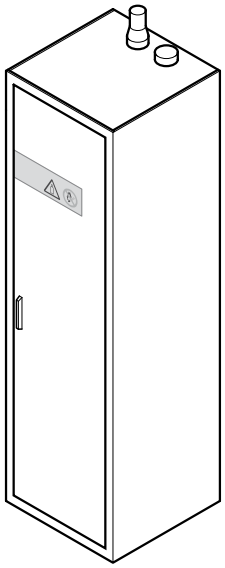

Variants

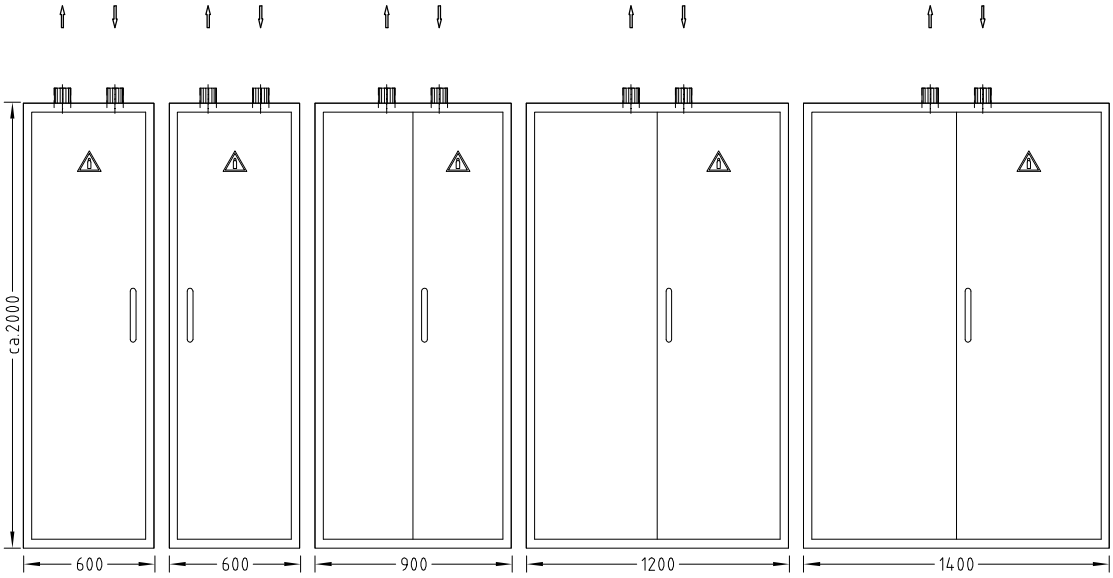

Special cabinets
G 90 gas cylinder cabinet

Technical data

Dimensions	600	900	1200	1400
Width [mm]	600	900	1200	1400
Depth [mm]	Approx. 600			
Overall height [mm]	Approx. 2000			
Max. net weight [kg]	390	530	660	740

Design characteristics	600	900	1200	1400
Construction	Connection to the permanently active ventilation system Mounting rail to take up gas reduction units Roll-in ramp for gas cylinders With closing 4 height-adjustable feet Feed-throughs for pipes and cables in the cabinet ceiling Hinged door(s)			
Max. number of 50 l gas cylinders for cabinet width	1	2	3	4
Other versions and configurations	On request			
Regulations and standards	EN 14470-2			

Ventilation data	600	900	1200	1400
Air exchange rate [m³/h] for cabinet width	60	90	120	140
Ventilation connection Ø [mm]	75			

Material	
Laboratory cabinet	Powder-coated stainless steel on the outside Colour: Pure white RAL 9010
Ventilation connection	Galvanised steel

5 Supply and disposal

For the disposal of liquid and solid substances, we offer our TÜV-certified systems for use in corresponding underbench units.

As a standard feature, our underbench units for waste disposal are equipped with safety trays to accommodate suitable containers. For more container replacement convenience.

Acids, alkalis and flammable liquids can be disposed of directly into the containers through screw-mounted safety funnels, or from the internal workspace through the funnels in the worktop.

Mechanical or electronic level indicators and suitable ventilation systems make these systems complete.

Our latest underbench units for the disposal of solid substances are supplied with two robust waste bins with a capacity of 35 l in a fully extensible drawer, or as a tilting door variant with a waste bin that holds 30 l.

Supply system for flammable liquids

For the cyclic and continuous supply with flammable liquids, suitable safety cabinets are used that are connected to a permanent exhaust air system.

Our cabinets are in accordance with the relevant standards and regulations.

With the safety pistol-grip nozzle with flexible stainless steel supply pipe, flammable liquids can be safely drawn.

Supply system for flammable liquids **174**

Waste disposal system for acids and alkalis **177**

Waste disposal system for flammable liquids **180**

Waste disposal system for solid matter and domestic waste **183**

Waste disposal system for radio-isotope residual material **185**

Supply system for flammable liquids

Intended use

- For safely storing and providing flammable liquids at the laboratory workstation in accordance with EN 14470-1 (type 90) and TRbF (appendix L)
- For transferring flammable liquids from containers into small containers (max. 2 containers with 30 l each)
- Not permitted for supplying the following hazardous substances:
  - Acids and alkalis
  - Gas cylinders
  - Radioactive substances
  - Microorganisms

Design

Cyclic supply

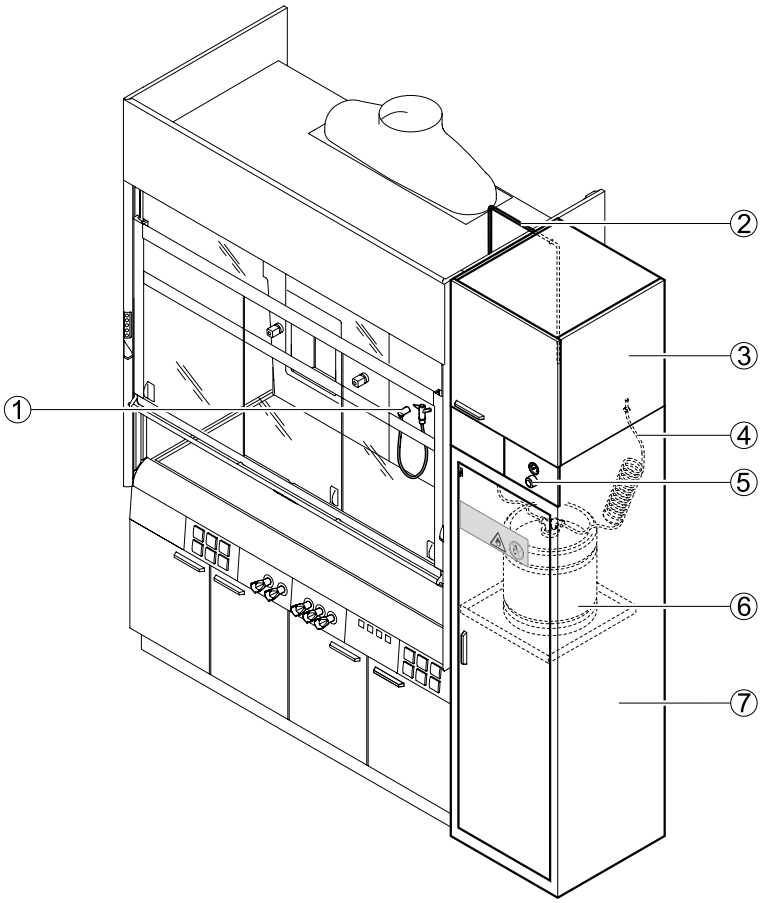

1 *Pistol-grip nozzle in the internal workspace*
2 *Outlet pipe*
3 *Top-mounted cabinet*
4 *Inert gas pipe*
5 *Pressure regulator*
6 *Container*
7 *Safety cabinet*

Continuous supply with automatic container changeover

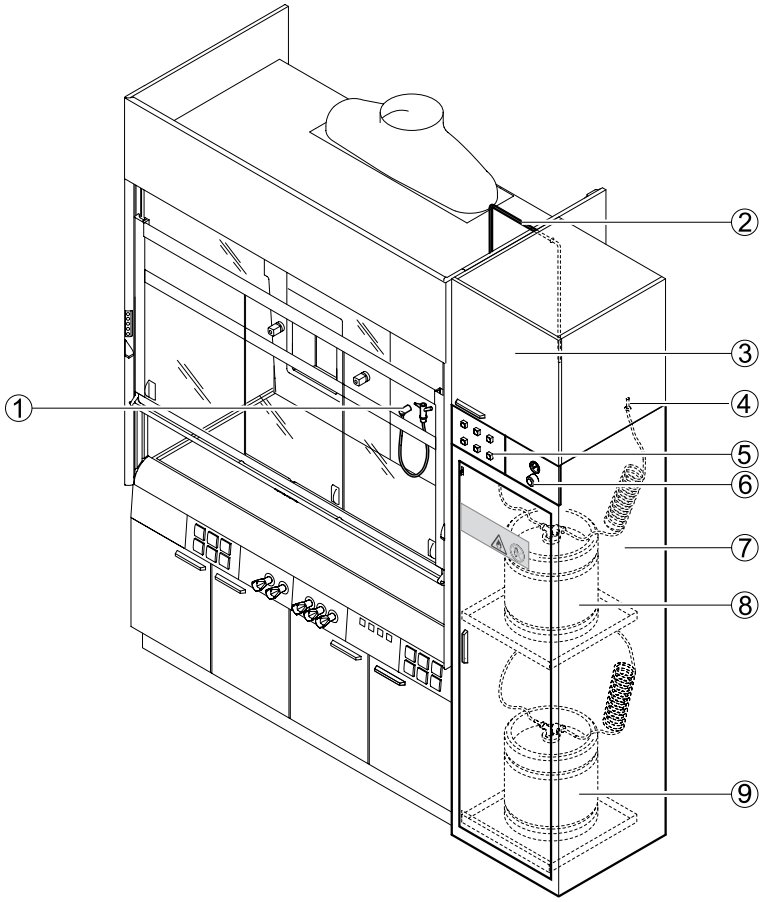

1 *Pistol-grip nozzle in the internal workspace*
2 *Outlet pipe*
3 *Top-mounted cabinet*
4 *Inert gas pipe*
5 *Electric module of the monitoring system*
6 *Pressure regulator*
7 *Safety cabinet*
8 *Container 1*
9 *Container 2*

Supply system for flammable liquids

Technical data

Dimensions	
Width [mm]	Approx. 600
Depth [mm]	Approx. 600
Height [mm] with top-mounted cabinet	2700
Container 30 l, height [mm]	440
Container 30 l, Ø [mm]	370

Design characteristics	
Construction	Connection to the ventilation system Connection to the earth wire with potential equalisation Self-closing through current-independent thermal activation in the case of fire Shelves, height-adjustable Tray Hinged door
Number of containers 30 l	1-2
Cyclic supply	With different flammable liquids Separate pipes to 1-2 containers in the safety cabinet
Continuous supply	With automatic changeover to the second container Common pipe connected to no more than 2 containers in the safety cabinet Monitoring system: automatic changeover to the second container if container is empty
Pressure regulator, solvent tapping system	Defined pressure of 0.2 bar for transporting the flammable liquid Safety valve from 0.5 bar
Outlet, solvent tapping system	Solvent pistol flexibly mounted in the internal workspace Solvent pistol rigidly mounted in the internal workspace

Material	
Safety cabinet	Stainless steel, powder-coated
Container	Stainless steel
Connection spigot, ventilation Ø 75 mm	Galvanised steel

Ventilation data	
Air exchange rate [m³/h]	50
Ventilation connection to the ascending duct Ø [mm]	90

Waste disposal system for acids and alkalis

Intended use

- For safely storing the remnants of acids and alkalis at the laboratory workstation temporarily
- Not permitted for the disposal of the following hazardous substances:
  - Flammable liquids
  - Gas cylinders
  - Radioactive substances
  - Microorganisms

Design

Filling through funnel in the underbench unit

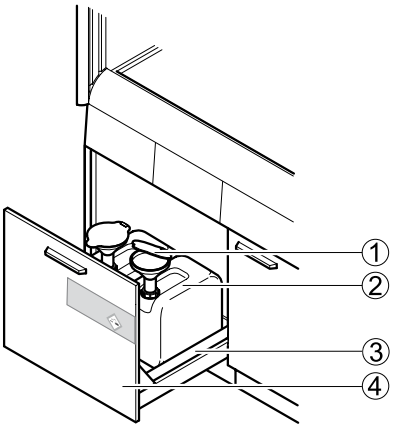

1 *Funnel*
2 *Canisters*
3 *Tray*
4 *Underbench unit with full-height drawer*

Filling through funnel in the internal workspace

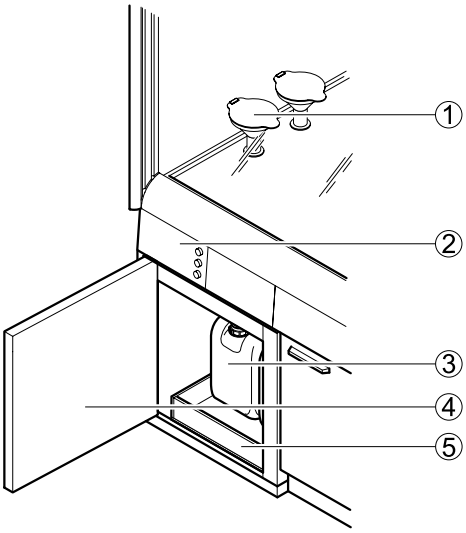

1 *Funnel on the worktop*
2 *Electric module with level indicator and control units*
3 *Canisters*
4 *Underbench unit with hinged door (without drawer)*
5 *Tray*

Waste disposal system for acids and alkalis

Technical data

Dimensions for underbench unit on plinth	
Width [mm]	600
Depth [mm]	550
Height [mm] at working height 750 mm	720
Height [mm] at working height 900 mm	870
Max. height [mm]	530
Height, plinth [mm]	110

Dimensions for self-supporting/push-in underbench unit for bench-mounted fume cupboards	
Width [mm]	600
Depth [mm]	550
Height [mm] at working height 900 mm	639
Max. height [mm]	425
Height, plinth [mm]	110

Dimensions for self-supporting/push-in underbench unit for bench-mounted fume cupboards with side installation	
Width [mm]	600
Depth [mm]	550
Height [mm] at working height 900 mm	716
Max. height [mm]	530
Height, plinth [mm]	110

Dimensions, canister	
12 l width x depth x height [mm]	195 x 231 x 350, connection thread S 60
20 l width x depth x height [mm]	260 x 285 x 390, connection thread S 60

Design characteristics	
Construction	Underbench unit with full-height drawer (max. 2 canisters) or underbench unit with hinged door and without drawer (max. 2 canisters) Connection to the ventilation system Coated fittings Tray made of polypropylene
Funnel	Underbench unit with full-height drawer: Funnel, fastened to canister with screws Underbench unit with hinged door: Funnel on worktop with filling pipe between funnel and canister
Filling	Funnel fastened with screws on canister: optical check of the filling level when the canister is transparent Funnel on the worktop: Electronic level indicator, acoustic and visual indication when the maximum level is reached
Approval, canister 12 l, 20 l	UN 3H1/Y1,9
Resistance	Based on consultation with Waldner

Waste disposal system for acids and alkalis

Funnel in the underbench unit	Canister 12 l	Canister 20 l	Canister 12 l and 20 l
Underbench unit on plinth for service spine	4	2	2 x 12 l and 1 x 20 l
Push-in underbench unit for service spine	4	–	–
Push-in underbench unit for bench-mounted fume cupboards	4	–	–
Push-in underbench unit for bench-mounted fume cupboards with side installation	4	2	2 x 12 l and 1 x 20 l

Funnel in the internal workspace	Canister 12 l	Canister 20 l	Canister 12 l and 20 l
Underbench unit on plinth for bench-mounted fume cupboards	2	–	–
Underbench unit on plinth for bench-mounted fume cupboards with side installation	2	1	1 x 12 l and 1 x 20 l
Push-in underbench unit for bench-mounted fume cupboards and fume cupboards with side installation	2	–	–

Material	
Canisters	PE-HD
Ventilation connection Ø 90 mm	PPS
Tray	PP
Components for installation	Electrically conductive PE-HD + PFA

Ventilation data	
Air exchange rate [m³/h]	50
Ventilation connection to the ascending duct Ø [mm]	90

Waste disposal system for flammable liquids

Intended use

- For safely storing remnants of flammable liquids at the laboratory workstation temporarily in accordance with EN 14470-1 (type 90) and TRbF (appendix L)
- For waste disposal using screw-mounted funnels in the underbench safety unit or through funnels on the worktop in the internal workspace
- Not permitted for the disposal of the following hazardous substances:
  - Acids and alkalis
  - Gas cylinders
  - Radioactive substances
  - Microorganisms

Design

Filling through funnel in the underbench unit

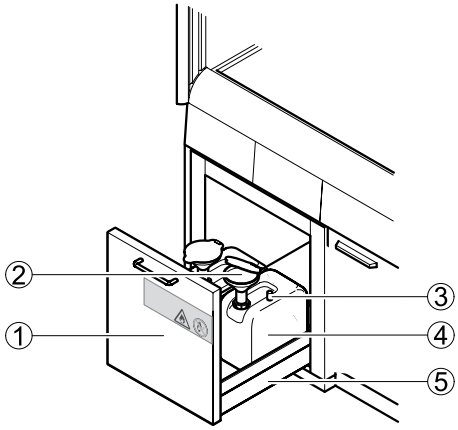

1 *Safety cabinet with full-height drawer*
2 *Funnel*
3 *Mechanical level indicator*
4 *Canisters*
5 *Tray*

Filling through funnel in the internal workspace

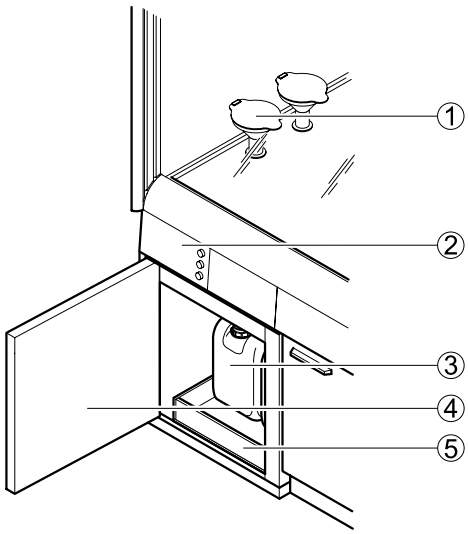

1 *Funnel on the worktop*
2 *Electric module with level indicator and control units*
3 *Canisters*
4 *Safety cabinet with hinged door*
5 *Tray*

Waste disposal system for flammable liquids

Transfer system for the disposal of flammable liquids

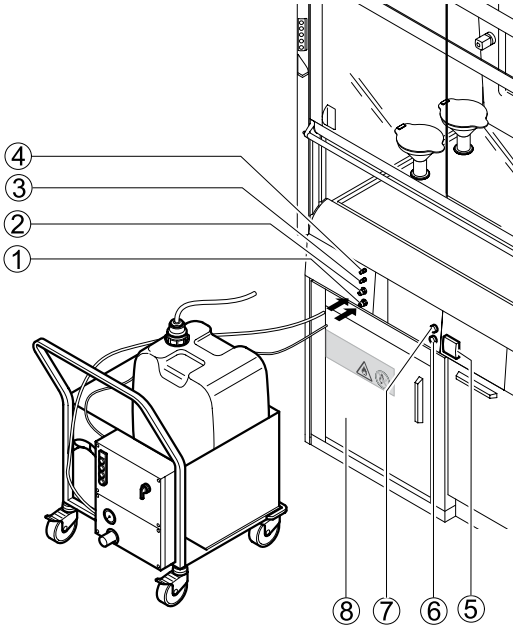

1 *Connection for suction pipe*
2 *Connection for extract air duct*
3 *Connection for compressed air pipe*
4 *Grounding socket*
5 *Socket*
6 *Signal button for alarms and acknowledgement*
7 *Operating mode indicator*
8 *Safety cabinet with hinged door and tray*

Disposal for HPLC devices

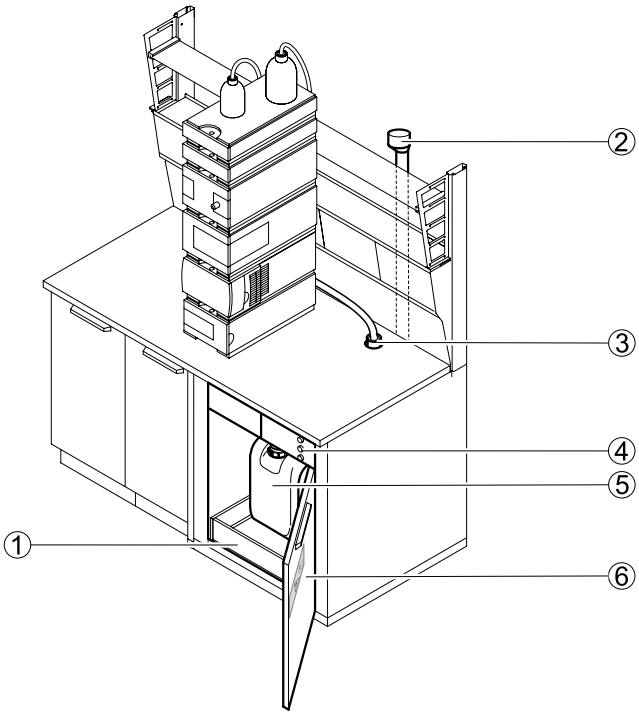

1 *Tray*
2 *Extract air duct*
3 *Receiving spigot for capillary tube*
4 *Electric module with level indicator and control units*
5 *Canisters*
6 *Safety cabinet with hinged door*

Waste disposal system for flammable liquids

Technical data

Dimensions	
Underbench safety unit, width x depth [mm]	Approx. 595 x 600
Underbench safety unit, overall height [mm]	Approx. 600
Canister 10 l, width x depth x height [mm]	198 x 298 x 264
Canister 30 l, width x depth x height [mm]	265 x 365 x 410

Design characteristics	
Construction	Underbench safety unit with full-height drawer with max. 2 canisters, underbench safety unit with hinged door with max. 2 canisters on heavy-duty drawer or with transfer system trolley with 1 transport canister Connection to the ventilation system Connection to the earth wire with potential equalisation Funnel, grounded, with flame protection filter
Canisters	2 canisters 10 l, grounded, or with transfer system 1 canister 30 l, grounded, permanently installed
Funnel	Underbench safety unit with full-height drawer: Funnel, fastened to canister with screws Underbench safety unit with hinged door, transfer system: Funnel on the worktop is connected with the canister through one filling pipe per funnel
Transfer system	Obligatory for canister with a capacity of 30 l
Approval, canister 10 l, 30 l	UN 3H1/Y1,6
Filling, level indicator	Funnel in the underbench safety unit: mechanical level indicator integrated in canister Funnel in the internal workspace: Electronic level indicator, acoustic and visual indication when the maximum level is reached Connection for liquid chromatographic instrument (HPLC) with spigot instead of funnels and electronic level indicator, as an option
Resistance	Based on consultation with Waldner

Transfer system for canister 30 l	
Construction	Trolley with transport canister 60 l, compressed air membrane pump and electronic level indicator When the maximum level is reached, the pump is automatically switched off and acoustic and optical signals are emitted
Trolley, width [mm]	615
Transport canister, material	Electrically conductive PE-HD

Material	
Underbench safety unit	Stainless steel, powder-coated
Canister 10 l, 30 l	Electrically conductive PE-HD
Flame protection filter, funnel	Stainless steel
Ventilation connection Ø 90 mm	PPS
Components for installation	Electrically conductive PE-HD + PFA

Ventilation data	
Air exchange rate [m³/h]	50
Ventilation connection to the ascending duct Ø [mm]	90

Waste disposal system for solid matter and domestic waste

Intended use

- For the disposal of remnants of solid matter and garbage from laboratory work
- Not suitable for the permanent storage of solid matter and garbage
- Not permitted for the disposal of hazardous substances, especially:
  - Acids and alkalis
  - Flammable liquids
  - Gas cylinders
  - Radioactive substances
  - Microorganisms

Design

Waste bin with full-height drawer

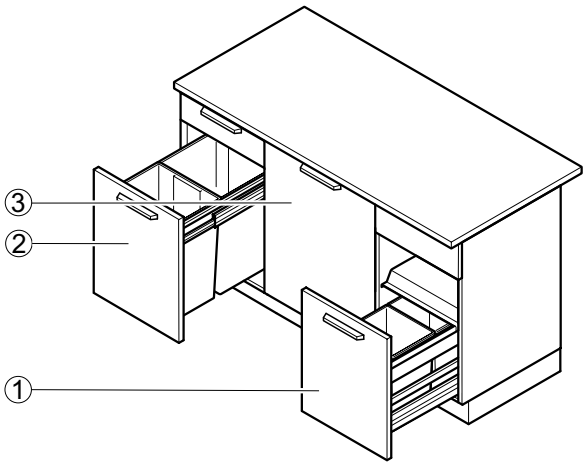

1 Waste bin 2 x 15 l
2 Waste bin 2 x 35 l
3 Full-height drawer

Waste bin with tilting door

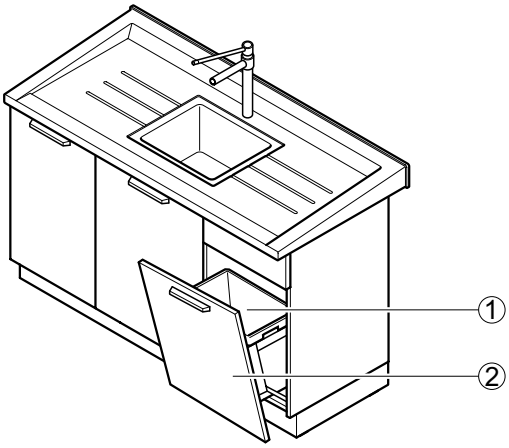

1 Waste bin 30 l
2 Tilting door

Waste disposal system for solid matter and domestic waste

Technical data

Dimensions for underbench unit on plinth				
Width x height [mm]	450 x 870	600 x 870	450 x 720	600 x 720
Depth [mm]	550			
Height, plinth [mm]	110			
Capacity with full-height drawer	2 x 15 l or 2 x 35 l	4 x 15 l –	2 x 15 l or 2 x 35 l	4 x 15 l –
Capacity with tilting door	1 x 30 l			

Dimensions for underbench unit for sinks			
Width x height [mm]	600 x 870	900 x 870	1200 x 870
Depth [mm]	550		
Height, plinth [mm]	110		
Capacity with full-height drawer	–	4 x 15 l	
Capacity with tilting door	1 x 30 l	2 x 30 l	

Dimensions for self-supporting underbench unit for bench-mounted fume cupboards	
Width x height [mm]	600 x 820
Depth [mm]	550
Height, plinth [mm]	110
Capacity with full-height drawer	4 x 15 l
Capacity with tilting door	1 x 30 l

Dimensions for push-in underbench unit for bench-mounted fume cupboards		
Width x height [mm]	545 x 639	600 x 639
Depth [mm]	550	
Height, plinth [mm]	110	
Capacity with full-height drawer	2 x 15 l	4 x 15 l
Capacity with tilting door	1 x 30 l	

Design characteristics	
Door	Full-height drawer Tilting door
Automatic foot-operated opening	Optionally for full-height drawers up to a width of 600 mm
Extract air spigot	Optional

Material	
Ventilation connection	PPS

Ventilation data	
Air exchange rate [m³/h]	30
Ventilation connection to the ascending duct Ø[mm]	90

Waste disposal system for radio-isotope residual material

Intended use

- Waste canister at the workplace for the safe disposal of slightly radioactive material
- Not permitted for the disposal of the following hazardous substances:
  - Acids and alkalis
  - Flammable liquids
  - Gas cylinders
  - Microorganisms

Design

Filling through funnel in the underbench unit (funnel with mechanical level indicator)

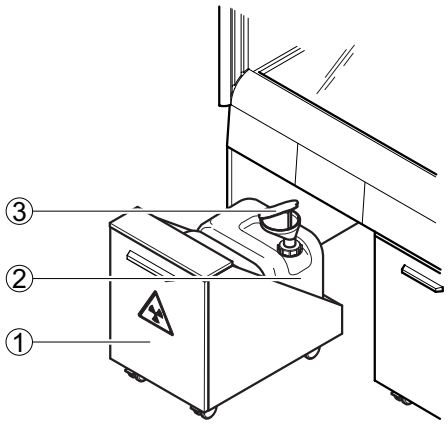

1 *Underbench unit on castors*
2 *Canisters*
3 *Funnel with mechanical level indicator*

Filling through opening in the worktop (electric level indicator)

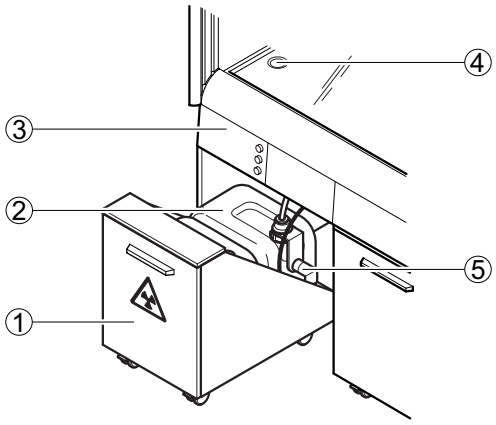

1 *Underbench unit on castors*
2 *Canisters*
3 *Service panel with level indicator*
4 *Opening in the worktop*
5 *Electric level indicator*

Technical data

Dimensions of underbench units for radio-isotope residual material		
Width [mm]	450	600
Depth [mm]	550	
Overall height [mm]	639	
Height, castors [mm]	110	
Canister 20 l, width x depth x height [mm]	250 x 300 x 390	
Collapsible box, width x depth x height [mm]	300 x 300 x 500	

Design characteristics of underbench units for radio-isotope residual material	
Construction	Front side with lead shield on the inside With castors Max. 2 canisters of 20 l in tray made of polypropylene to take up slightly radioactive, liquid residual material Collapsible box to take up solid radio-isotope residual material as an option
Filling and level indicator	Funnel in the underbench unit with mechanical level indicator with signal rod that rises above the funnel edge when the maximum level is reached Opening in the worktop in the internal workspace with electronic level indicator, acoustic and visual indication when the maximum level is reached

6 School

We are the technological market leader in Europe for fitting out multi-functional sciences classrooms.

Our new ***SCALA*** school system integrates variably in all types of rooms without problems and provides a large amount of free space for technical and educational needs.

With our new ***SCALA*** school system we provide the ideal basis for successful learning. Due to the large number of possible configurations our modular concept enables to design multi-functional classrooms and to fully utilise their capacities. In this way, technology and science can be experienced in many different ways.

We will be pleased to send you detailed information on our new school system. Please contact us at www.waldner-schule.de.

CulinaEm

7 Services

We are the only manufacturer of laboratory equipment who offers you fume cupboards and variable fume cupboard control all from one supplier. Benefit from our know-how in the field of laboratory control.

All over the world we have realised a large number of projects of varying size; these projects are operated to the great satisfaction of our customers. This fact confirms our philosophy of acting as a system provider.

Furthermore, you as a customer will find it convenient and economical to have only one contact for all questions on the issue and also for maintenance.

Being a full-range supplier, we will plan and implement your project in no time – in the typical Waldner way. Being a market leader, we have the necessary capacity for your project – no matter how big. Please contact us. We will be glad to help you.

Airflow Controller

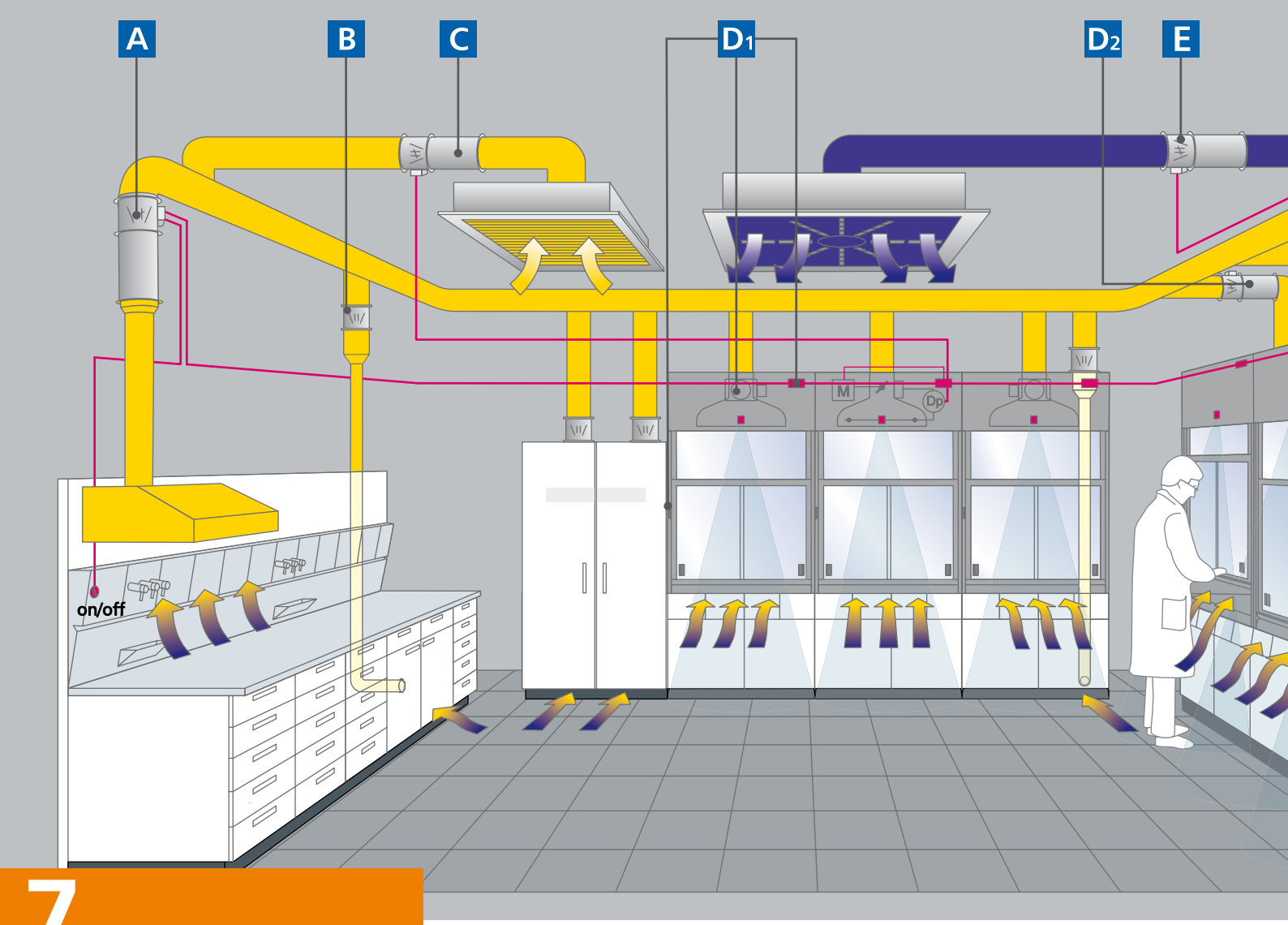

7 Services

Large cost savings in every operating state

From an economic point of view, the laboratory furniture and the ventilation of the entire laboratory building are no longer separate entities today. Waldner's intelligent laboratory control significantly reduces the operating costs of the ventilation system and ensures maximum work safety.

Sophisticated technology for optimum operation

Our fume cupboards are an important part of laboratory ventilation and can be integrated into the building ventilation concept in an ideal way. The measurement and control system of our Airflow-Controller identifies the state of utilisation of the fume cupboard reliably at any time and adjusts the air exchange rate precisely and safely within seconds.

If required, the air exchange rate at the fume cupboard can be increased or decreased manually at any time.

Investing in our laboratory control will quickly pay for itself

A cost-benefit analysis clearly speaks for our laboratory control: Since the ventilation system is efficiently used while the energy supply is reduced, investing into this laboratory control system will pay off within one to two years. Considering continuously increasing energy prices, this is an important advantage.

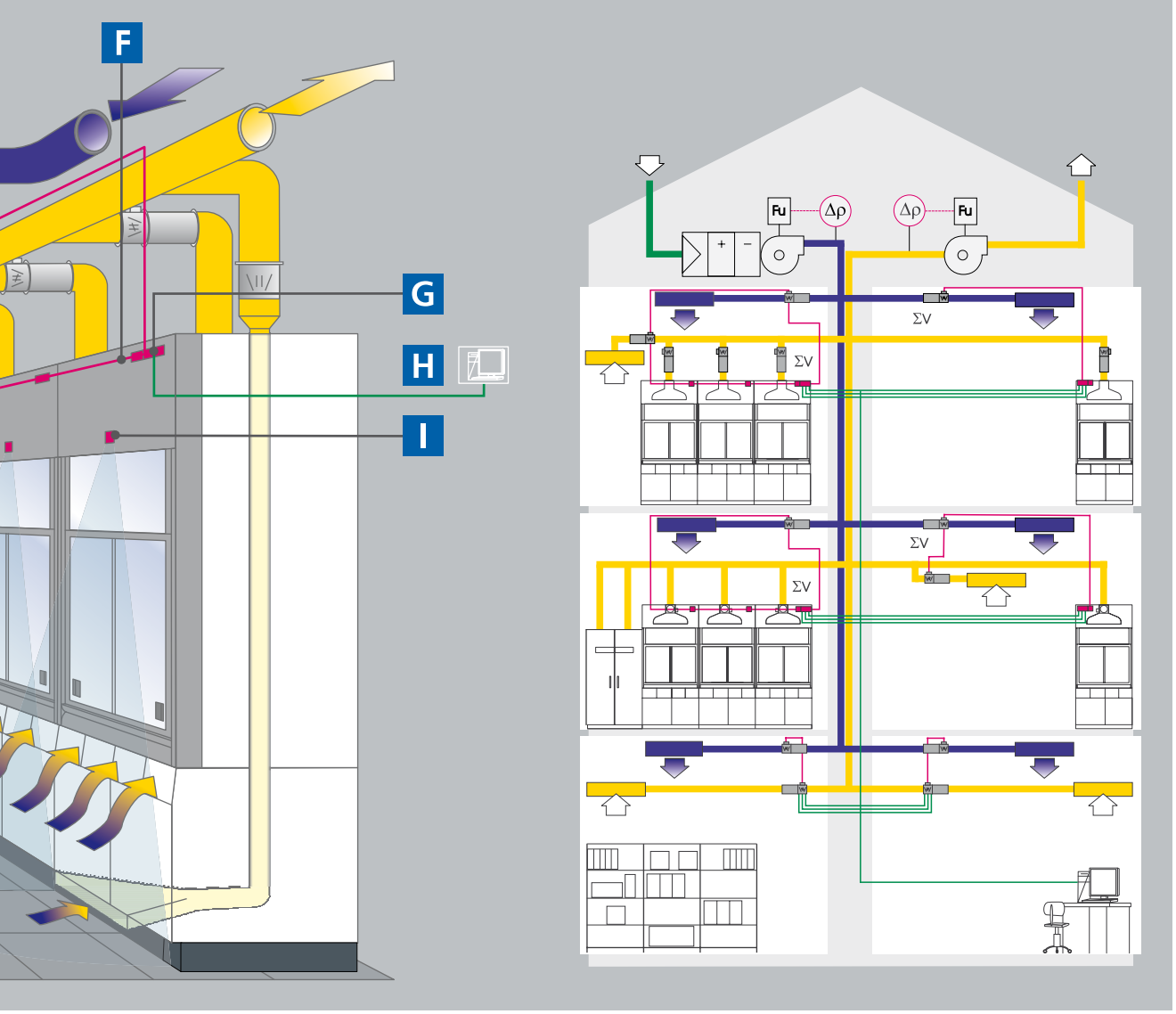

Ventilation and control as an overall concept

Being a leading system partner, we will develop an overall concept for your laboratory – from the appropriate sizing of the central ventilation system and the ducts to the selection and use of the appropriate process measuring and control technology.

- **A** Airflow damper extractor hood AC3 Compact
- **B** Mechanical airflow damper
- **C** Airflow damper extract air AC3 Compact
- **D1** Airflow-Controller AC3 v Standard
- **D2** Airflow-Controller AC3 v pipe controller
- **E** Airflow damper Supply air AC3 Compact
- **F** CAN bus
- **G** Airflow-Controller with activated master function for laboratory control
- **H** The following methods of communication with the DDC/building control are possible: Analogue I/O, LON bus, Modbus, Profibus, CAN bus, BACnet, Ethernet
- **I** Sash controller SC

Control and monitoring
Control

Control – Airflow-Controller (AC) for fume cupboards DIN EN 14175-6

Airflow-Controller AC

The central control unit is a microprocessor-based electronic control unit and forms the heart of the Waldner control system.

The standard set value is determined via the sash position. The processor rapidly and precisely adjusts this value using defined control behaviour (adaptive or predictive). The microprocessor detects the required damper position, has a maximum regulating speed of two seconds for 90° and is equipped with a position control system. Setpoint changes settle fully within three seconds.

In addition during calculation, an appropriate measuring diaphragm coefficient is determined using a family of characteristics defined from the damper position and the differential pressure.

In accordance with EN 14175, a visual and acoustic alarm indicates when the value drops below the set value. A visual and acoustic alarm is also generated if the sash is opened beyond the maximum permitted sash opening.

As a standard, the control flap is used with an extract manifold. For rooms less than 3.30 m, motorised dampers must be used as pipe controllers.

On the use of the Secuflow technology, this feature is monitored and controlled. If the extract air volume drops below the stipulated extract air volume, the supportive flow technology is shut down.

If the supportive flow technology fails, this is indicated by a visual and acoustic alarm, and the extract air flow rate is automatically increased to the value for a standard fume cupboard.

1 Display and operating device

2 Sensors for detector of sash position

3 Extract manifold with actuator, measuring system and measurement acquisition

4 Central control unit AC

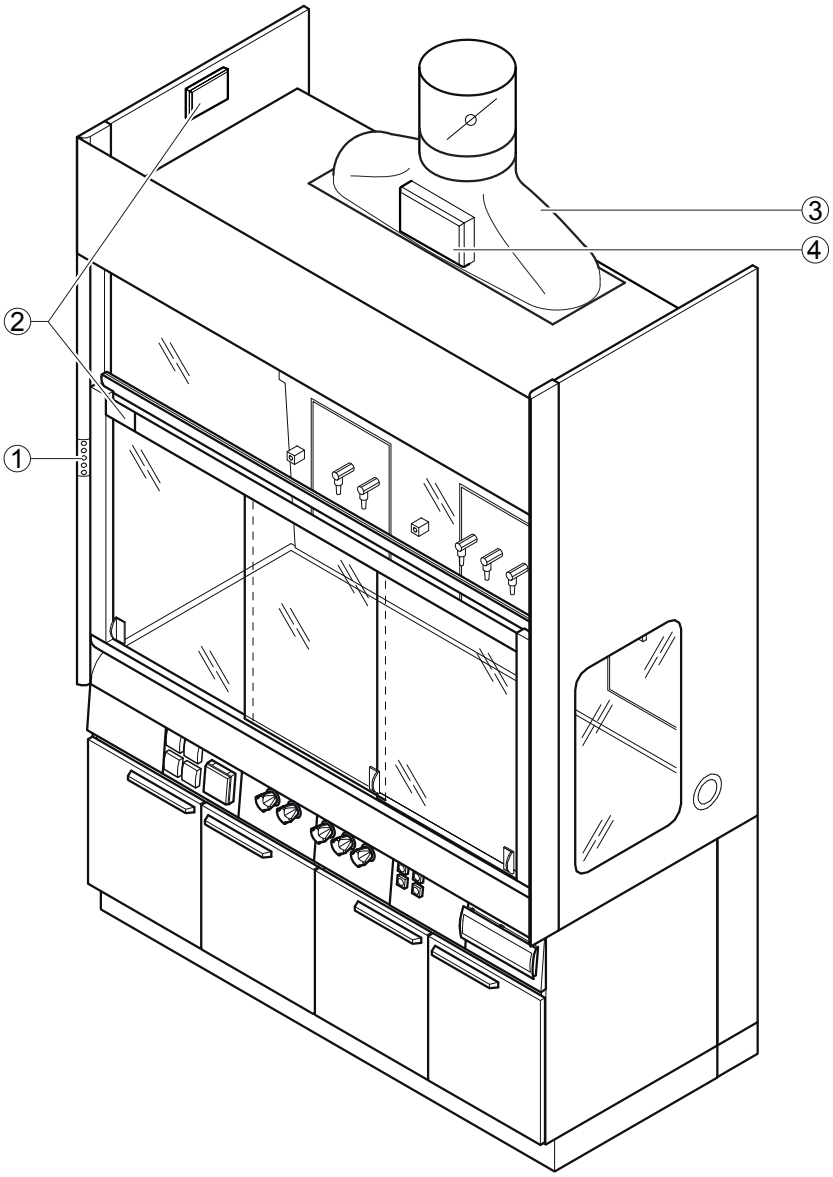

The fume cupboard and controller are an entity

The systems are precisely matched to each other, thus ensuring maximum reliability during laboratory operation.

The fume cupboard and variable air volume control are type-approved in accordance with EN 14175-6 as a complete safety system. Thus, the time-consuming and costly coordination of different trades becomes unnecessary and legal security and warranty are provided by one supplier, if need be.

Our patented measurement method and measuring system

Due to the variable measuring diaphragm coefficient and the special principle of operation of the measuring system, an airflow stroke of 1:15 can be realised. During night operation, the air volume at the fume cupboard can thus be reduced to 100 m³/h.

A measuring accuracy of +/- 5 % of the current actual value of the air exchange rate is also guaranteed. This is necessary to ensure that the directed airflow in the laboratory is maintained even if the air exchange rates are low.

EN 14175-6 type tested fume cupboard control in acc. with 5.4 Measuring in the outer measuring level

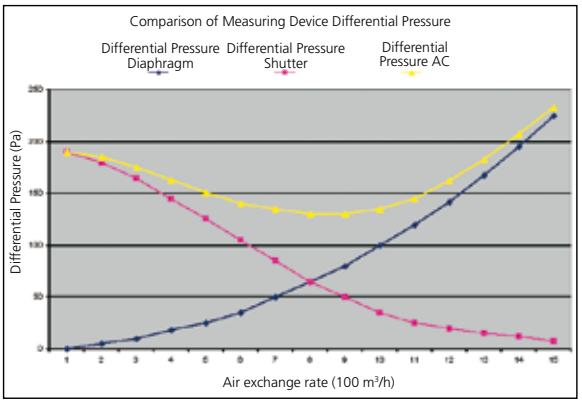

Differential pressure curve AC

Control panel AC

- *Light On/Off*
- *Visual and acoustic alarm*
- *Flushing function (increasing the air volume)*
- *Lowered operation*
- *Monitoring and control on / off*

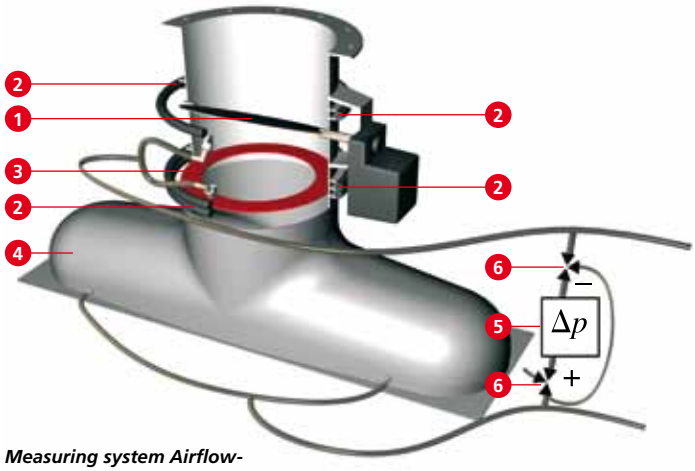

Measuring system Airflow-Controller

1 Control flap
2 Pressure measuring ducts
3 Measuring panel
4 Extract manifold
5 Pressure sensor
6 Magnetic valves

Control and monitoring
Control

Technical data

Characteristics	
Air exchange rate range for diameter DN 250	100 - 1500 m³/h
Air exchange rate range for diameter DN 315	200 - 3000 m³/h
Measuring accuracy to the actual value	+/- 5 %
Nominal capacity	35 VA
Motor run time for 0-90°	2 seconds
Control time	3 seconds adjusted
Permitted system pressure	100 - 600 Pa

Inputs	
Voltage supply	230 V
Digital input	6 (freely parametrisable)
Analogue input	1 (freely parametrisable)
Sash detector	2 pieces (sash and horizontal sash detector)
Modbus connection	RS 232
PDR connection	RS 232
CAN bus	

Outputs	
Digital output	5 (freely parametrisable)
Analogue output	1 (freely parametrisable)
Control of AC3 Compact	RS 485
Control panel connection	RJ 10
Can bus	
Motor control	RJ 45

Design	
Airflow damper and monitoring	Constant or variable

Master function for room control

The module cyclically acquires the individual extract rates of the extracted units in the laboratory so that a total extract air volume can be formed.

A minimum air exchange can be maintained for four different operating states in the laboratory. If the minimum air exchange is not achieved by the minimum air values for the fume cupboards, the module determines the corresponding minimum value and sends it to the fume cupboards or room extract air airflow dampers. If a fume cupboard is opened and the minimum air exchange is exceeded, the remaining fume cupboards or the room extract air airflow damper are reduced to their minimum air value. If the minimum air exchange continues to be exceeded, the input air is increased.

The temperature and room pressure can be controlled with this module.

A stipulated simultaneity (per laboratory max. extract rate) for the use of the fume cupboards can be monitored. When the stipulated max. extract rate is exceeded, a signal is sent to the fume cupboards in the laboratory.

The control unit controls input and extract air airflow dampers (AC Compact) via the internal bus system.

Data between the laboratory control and the DDC or GLT can be exchanged using the following interfaces:
– Modbus RTU
– LON-Bus
– Profibus
– Ethernet
– BACnet
– Analogue I/0

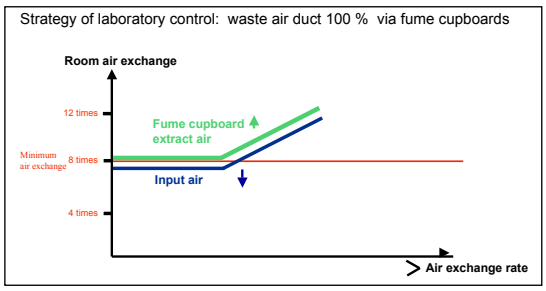

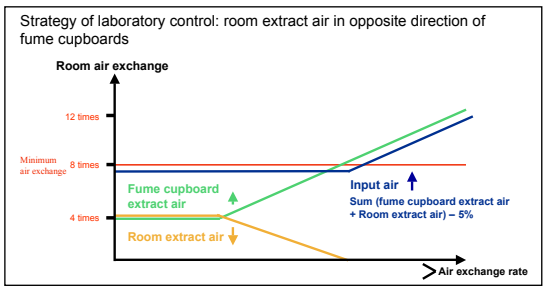

Example of a laboratory control variant

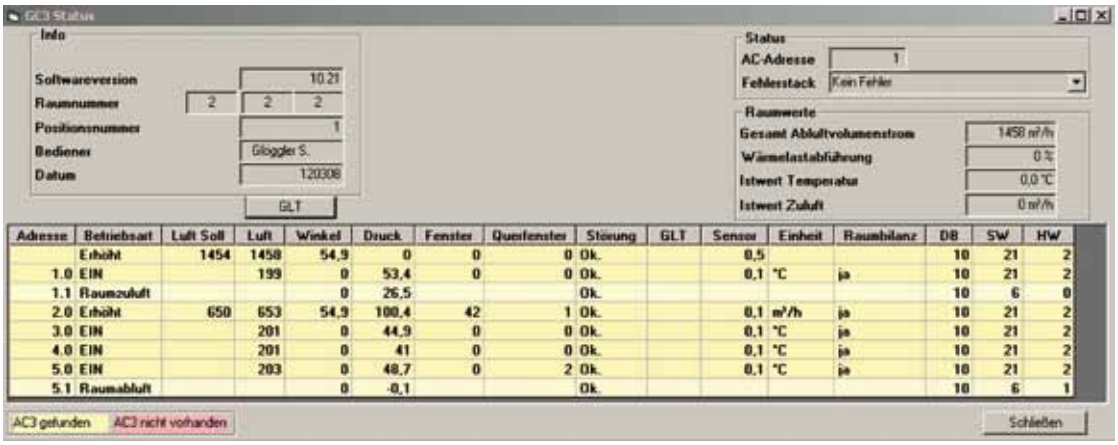

Control and monitoring
Laboratory control

AC3 Compact

Areas of application
– Room input air controller
– Room extract air controller
– Airflow measuring system/measuring panel (without control flap and actuator)
– Extension module for AC3
Up to four AC3 Compact controllers can be connected and managed for each AC3 controller.

AC3 Compact
AC3 Compact, the microprocessor-based electronic control unit, controls the air volume infinitely.
It rapidly and precisely adjusts the air exchange rate to suit the set value using defined control behaviour (predictive and adaptive).

Performance criteria
– Control parameters are adaptively optimised online
– Standard tolerances are predictively corrected using a theoretical process model
– Control of the position of the motorised damper
– Floating time 5 seconds adjusted
3 seconds 80 % of the set value
– Freely parametrisable on a PC basis
– Integrated pressure sensor 0-250 Pa (pressure-resistant up to 2500 Pa)
– Motorised damper housing: galvanised, stainless steel, PPs

Connections (partly parametrisable)
– 2 x analogue output
– 1 x analogue input
– 1 x digital input
– 1 x control panel input RJ 10
– 1 x Modbus input internal RJ 45
– 1 x Modbus output internal RJ 45
– 1 x motor output RJ 45
– 1 x connector with twin terminals
24 VAC/DC, I max. 0.7 A (17 W)

AC3 Compact

Actuator

Galvanised controller housing with AC3 Compact and fast actuator

Technical data

Design values for round input and extract air airflow dampers

Nominal size	Installation length	Air exchange rate range B1		Air exchange rate range B0		Air exchange rate range B2	
[mm]	[mm]	Vmin	Vnom	Vmin	Vnom	Vmin	Vnom
100	530	27	190	19	136	39	272
125	530	43	299	31	214	61	428
160	530	71	494	50	353	101	706
200	580	111	776	79	554	159	1108
250	580	174	1217	124	869	249	1739
315	620	277	1939	198	1385	396	2770
355	620	352	2466	252	1762	504	3523
400	620	448	3135	320	2239	640	4479
500	960	701	4909	501	3506	1003	7012
630	960	1115	7806	796	5575	1595	11151

Design values for square input and extract air airflow dampers

Construction dimensions		Installation length	Air exchange rate range B1		Air exchange rate range B0		Air exchange rate range B2	
Width [mm]	Height [mm]	[mm]	Vmin	Vnom	Vmin	Vnom	Vmin	Vnom
200	140	530	98	689	70	492	141	984
250	140	530	123	862	88	616	176	1232
280	160	530	158	1107	113	791	226	1581
315	180	580	201	1404	143	1003	287	2006
355	200	580	252	1761	180	1258	360	2516
400	224	580	318	2227	227	1590	455	3181
400	280	580	398	2788	284	1992	570	3983
315	315	620	353	2469	252	1763	504	3527
355	355	620	449	3140	320	2243	641	4486
400	400	620	570	3992	407	2851	815	5703
500	400	620	714	4995	509	3598	1020	7135
630	400	620	900	6299	642	4499	1287	8998
800	400	620	1143	8004	816	5717	1635	11434
630	200	620	433	3133	316	2238	633	4476

Control and monitoring
Monitoring

Control – Function display (FAZ) for fume cupboards EN 14175-2

EN 14175-2 requires continuous monitoring of the ventilation function of fume cupboards to warn the laboratory personnel with visual and acoustic signals in the event of a fault. The visual signal cannot be cancelled.

The FAZ is an electronic monitoring system that continuously measures the extract air volume rate. It provides an acoustic alarm and a visual alarm when the flow rate drops below the threshold set for the extract air. Since the air exchange rate and – if applicable – the Secuflow technology are continuously checked, permanent monitoring of the fume cupboard's ventilation function is ensured.

The display is in the guide profile on the fume cupboard. Alarms, e.g. shortage of air, are indicated in red and warnings, e.g. exceeding the max. operational sash opening height, are indicated in orange. The acoustic alarm can be deactivated by pressing a switch button. Switching on/off the FAZ by the user can be enabled as an option.

Airflow measurement FAZ

The extract-air manifold on the fume cupboard is used to generate the pressure signal.

The measurement is a differential pressure measurement. The function display works independent of room pressure fluctuations and independent of the sash opening.
During night operation, a second air volume can be monitored.

FAZ control panel

– Light On/Off

– Visual and acoustic alarm

– Not occupied

– Night operation display

– Functional monitoring On / Off

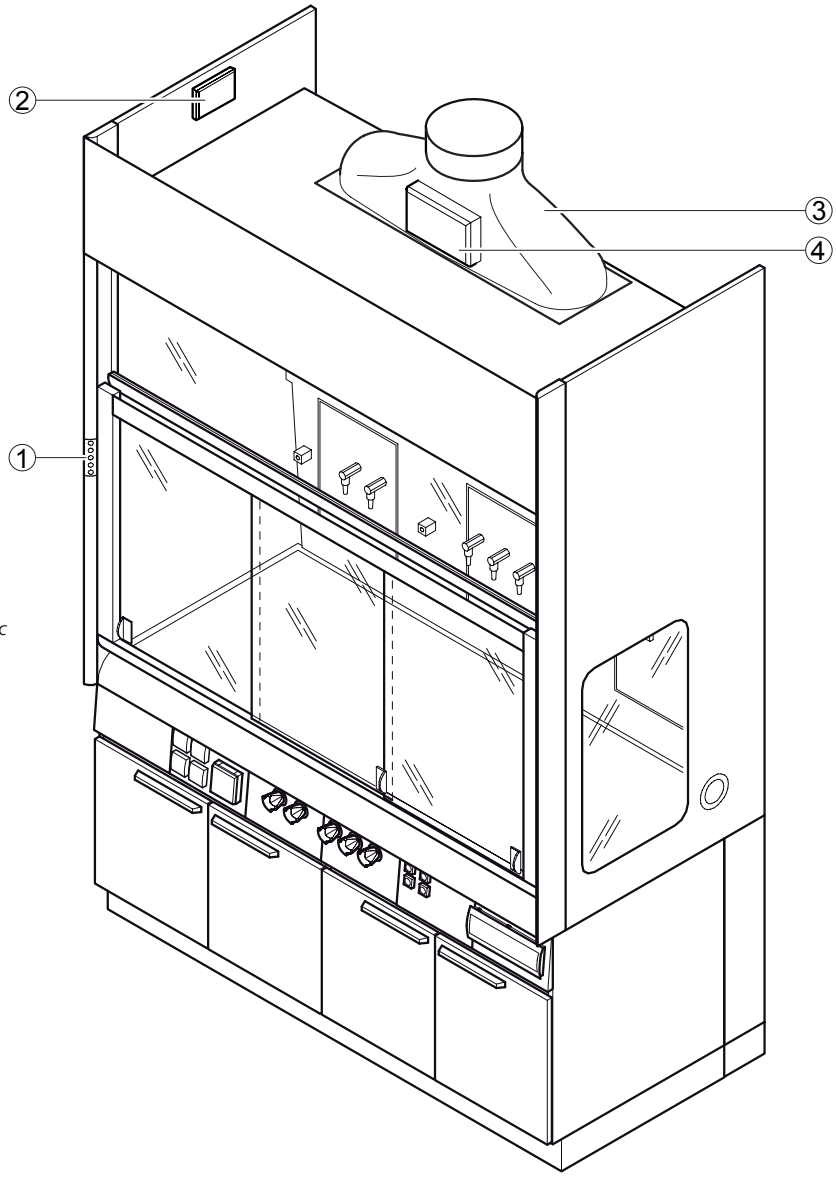

1 Display and operating device
2 Potentiometer sash position
3 Extract manifold with differential pressure measurement
4 Central control unit FAZ

Differential pressure measurement FAZ
1 Extract manifold, available in two designs:
Diameter of 250 mm and diameter of 315 mm
2 Pressure sensor

Diameter of measuring tube of 250 mm
for fume scrubber and filter fume cupboards

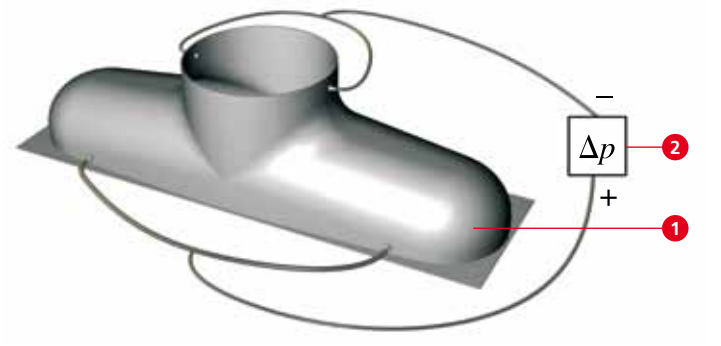

Technical data

Monitoring	Function display (FAZ)
Power supply	230 V
Outputs	Alarm output
	Operating message
	Light switch
Inputs	On
	Off
	Acoustic alarm acknowledgement
	Night operation
Diameter [mm]	250, 315

Sash controller

If the operator slightly moves the sash, the opening or closing movement of the sash is supported and continued by a motor.

The sash electronics close the fume cupboard sash using a motor when the fume cupboard is not in use. The area in front of the fume cupboard is monitored by a motion detector. If no movement is detected in front of the fume cupboard for a certain period of time, the sash is closed. The photo-electric barrier integrated in the bottom edge of the sash is used to detect obstacles in the path of the sash and the closing process is stopped.

The use of a sash controller means that the requirement in TRGS 526 to close fume cupboards when they are not currently in use is implemented automatically in practice.

The closing delay after the sensors are enabled can be set between thirty seconds and fifteen minutes.

Component parts:
1) Processor-controlled central control unit
2) Motor drive (closes and opens the sash)
3) The photo-electric barrier integrated in the sash frame serves to detect obstacles in the path of the sash when the sash is automatically closed
4) The motion detector stops the sash when working in front of the sash

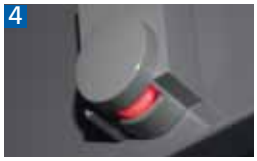

8 Accessories

For our latest ***SCALA*** laboratory furniture system we have designed useful accessories to fit out your working environment in certain laboratory areas individually as required.

Their system compliance, flexibility and sophisticated design make the movable sliding elements Sekretär, Assistent and Protector space-saving and extremely useful helpers at the workplace.

We will be pleased to show you many more accessories that are perfectly adapted to our new system.

Make your choice. The complete range of Waldner original accessories can be found in our special catalogue which is available on the Internet at www.waldner-lab.com.
We will also be pleased to send you a printed copy.

9 General

Our innovative developments have made us the European market leader in laboratory equipment.

Our products have set the standard for the laboratory workplace worldwide.

We know what our customers expect and we are constantly improving.

We reserve the right to make technical changes in the context of further development. Illustrations, drawings and text content are copyright protected. Re-printing, even of extracts, only with express approval of
WALDNER Laboreinrichtungen GmbH & Co. KG.

Colours **204**

Laboratory planning **204**

Awards **208**

Installation interfaces mechanical and electrical services **210**

Colours

With respect to design and colour, we placed the emphasis on a balanced appearance with consistency in the application for optimal orientation in the surroundings in which the user spends many hours a day. As a result laboratories can be clearly and time-lessly designed for pleasant working.

White
RAL 9010 pure white

- Storage cupboards
- Internal workspace

Walnut

- Sekretär, Assistent, Protector
- Optional as emphasis for storage cupboard fronts

Light grey
NCS S 3005 R80B
Similar to RAL 7040

- Metal parts, service module
- Bench frames, work-tops

Colours

Anthracite metallic effect
NCS S 5502 R
- Fume cupboard fronts

Glass
NCS S 1010 G10Y
- Worktops back-varnished

Dark grey
NCS S 7502 B
Similar to RAL 7015
- Storage cupboard plinth

Stainless steel
- Handles
- Worktops
- Sinks

Pictograms
CMYK 0/16/65/0
- Emphasising all markings for hazardous goods and special storage units

Laboratory planning

Our services go way beyond the pure manufacture of laboratory furniture. Due to our many years of experience in the project business, we have acquired fundamental planning competence. We not only equip your laboratory, but on request we will also take over the planning and coordination of all related trades.

The start of planning

The layout planning defines with two-dimensional clarity the intended space utilisation, requirements and existing features, connections, area dimensions, interfaces and other information.

Clear idea using an additional dimension

The laboratory will become clearly conceivable for you through the 3D drawing. We will then refine the details together with you.

In the next stage of the presentation, your laboratory will be almost "accessible" in colour and with clear, differentiated depth in the rendered representation. You will be able to see your laboratory from all angles.

As a logical conclusion to our precise planning and design work, the laboratory will be installed in your building – of course with the usual Waldner quality and on time.

Laboratory planning

Awards

We have been further developing laboratory furniture for more than 60 years. Over this long period of time, we have had a significant impact on the laboratory workplace with our innovations.

As a result of our attention to detail during development and manufacturing, we have an impressive pool of experience in development, manufacture, planning, installation and service.

Numerous patents, brands, design patents and registered designs clearly demonstrate our innovative power. As European market leader, we will continue to do everything to impress our customers with new and innovative ideas.

You can always see the current state of our developments and patents in the Internet at www.waldner-lab.com.

GOOD DESIGN

GOOD DESIGN AWARD

2009

SCALA LABORATORY FURNITURE SYSTEM

Designed by
IDEA DESIGN TEAM

Manufactured by
WALDNER LABOREINRICHTUNGEN GmbH & Co. KG

THE CHICAGO ATHENAEUM
MUSEUM OF ARCHITECTURE AND DESIGN

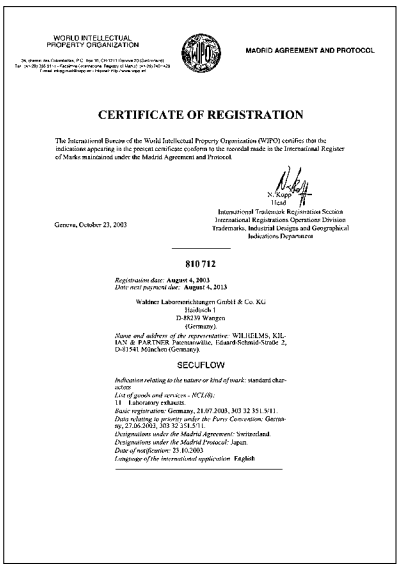
WORLD INTELLECTUAL PROPERTY ORGANIZATION

MADRID AGREEMENT AND PROTOCOL

CERTIFICATE OF REGISTRATION

The International Bureau of the World Intellectual Property Organization (WIPO) certifies that the indications appearing in the present certificate conform to the recordal made in the International Register of Marks maintained under the Madrid Agreement and Protocol.

N. Kupp
Head
International Trademark Registration Section
International Registrations Operations Division
Trademarks, Industrial Designs and Geographical Indications Department

Geneva, October 23, 2003

810 712

Registration date: August 4, 2003
Date next payment due: August 4, 2013

Waldner Laboreinrichtungen GmbH & Co. KG
Hauptsch 1
D-88239 Wangen
(Germany).

Name and address of the representative: WILHELMS, KILIAN & PARTNER, Patentanwälte, Eduard-Schmid-Straße 2, D-81541 München (Germany).

SECUFLOW

Indication relating to the nature or kind of mark: standard characters
List of goods and services - NCL(8):
11 Laboratory exhausts.
Basic registration: Germany, 21.07.2003, 303 32 351.5/11.
Data relating to priority under the Paris Convention: Germany, 27.06.2003, 303 32 351.5/11.
Designations under the Madrid Agreement: Switzerland.
Designations under the Madrid Protocol: Japan.
Date of notification: 23.10.2003
Language of the international application: English

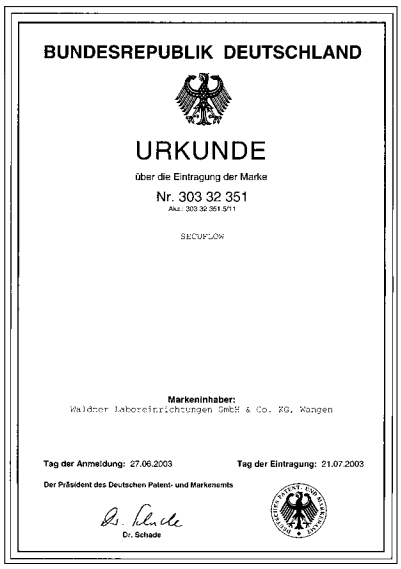
BUNDESREPUBLIK DEUTSCHLAND

URKUNDE

über die Eintragung der Marke

Nr. 303 32 351

Akz.: 303 32 351.5/11

SECUFLOW

Markeninhaber:
Waldner Laboreinrichtungen GmbH & Co. KG, Wangen

Tag der Anmeldung: 27.06.2003 Tag der Eintragung: 21.07.2003

Der Präsident des Deutschen Patent- und Markenamts

Dr. Schade

BUNDESREPUBLIK DEUTSCHLAND

URKUNDE

über die Erteilung des

Patents

Nr. 100 24 747

BUNDESREPUBLIK DEUTSCHLAND

URKUNDE

über die Eintragung des

Gebrauchsmusters

Nr. 201 21 243.9

SECUFLOW

Quality right down into the detail is defined not only by our claims about what we do.

We are the first German manufacturer of laboratory furniture to be certified to the quality standard ISO 9001:2008.

ISO 9001:2008 gives you the assurance that you will receive the highest quality products and professional support from the planning phase through to service. Of course, this aspect also covers procurement, development, the technical areas, production and installation.
In-house quality checks and regular training ensure exact observance of the high criteria in ISO 9001:2008.

The products for the ***SCALA*** laboratory furniture system have been tested by TÜV Product Service GmbH based on all applicable standards and regulations in accordance with the German law on equipment safety and have the GS marking.

These test certificates are only awarded if the manufacturing process is continuously monitored. We have undertaken the obligation to monitor production in several ways: all materials, components and individual parts used in our factory are continuously tested, in some cases also in external test institutes.

ZERTIFIKAT

DVGW-Baumusterprüfzertifikat
DVGW type examination certificate

CERTIFICATE
ISO 9001: 2008

URKUNDE

Installation interfaces mechanical and electrical services

- For water and technical gases, shut-off valves with 1/2″ internal threads must be provided on-site according to EN ISO 228-1:2003-05
- For pure gases, shut-off valves with 10 mm clamp ring connections must be provided on-site
- For waste water connections, a 56 mm plug sleeve must be provided on-site.

- Electrical supply pipe in acc. with DIN VDE 0100-430
- Type of cable/pipe with on-site fusing upon agreement with Waldner

- Waldner will indicate the transfer points for the on-site trades for each project in the corresponding positional drawings

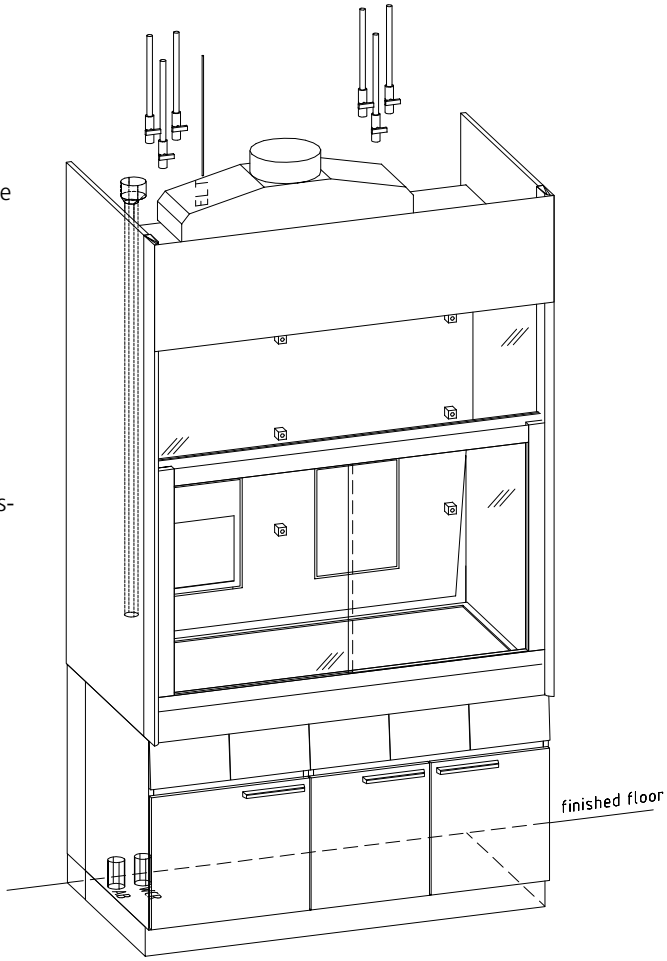

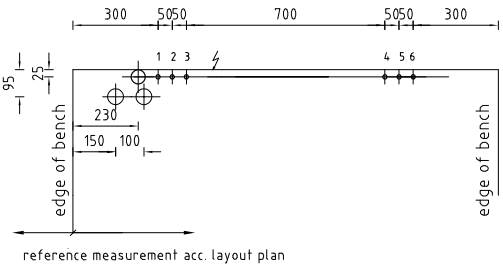

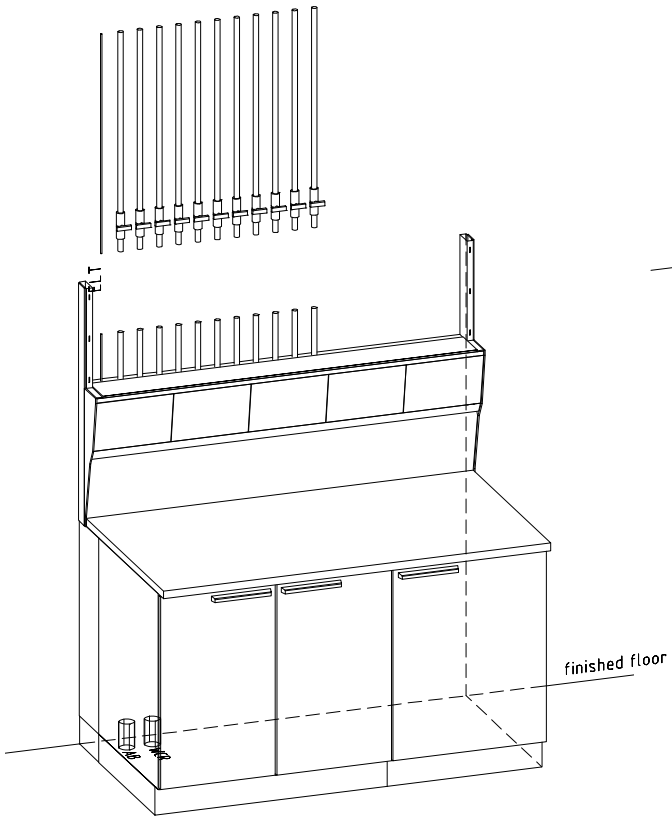

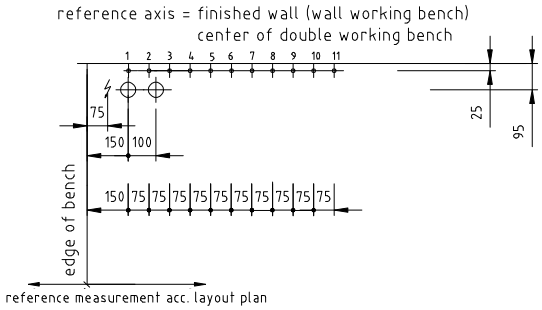

WALDNER Laboreinrichtungen GmbH & Co. KG
Haidoesch 1 · 88239 Wangen · Germany
Phone +49 7522 986-480 · Fax +49 7522 986-418
labor@waldner.de · www.waldner-lab.com

1491 · 0310 · Konzeption und Gestaltung: Büro für Gestaltung, Isny im Allgäu